SOLJET PRO II V
Sign Maker by Roland DG Corporation

Roland

SC-545EX
Print&Cut

User's Manual

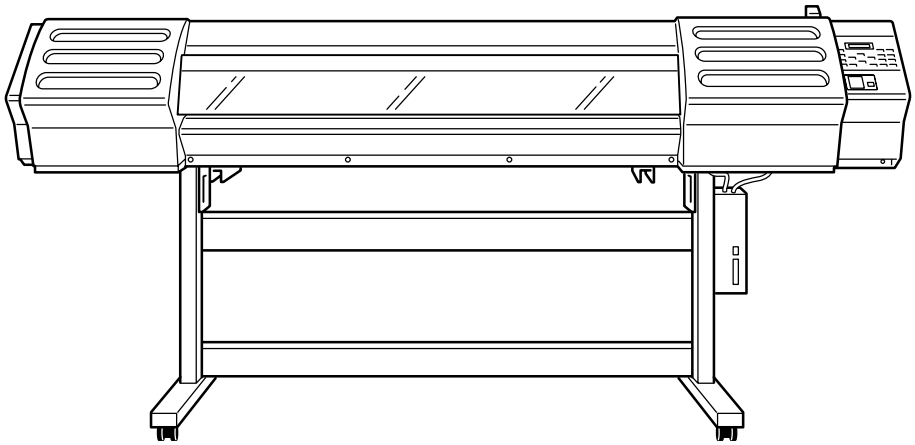

Thank you very much for purchasing the product.

- To ensure correct and safe usage with a full understanding of this product's performance, please be sure to read through this manual completely and store it in a safe location.
- Unauthorized copying or transferral, in whole or in part, of this manual is prohibited.
- The contents of this operation manual and the specifications of this product are subject to change without notice.
- The operation manual and the product have been prepared and tested as much as possible. If you find any misprint or error, please inform us.
- Roland DG Corp. assumes no responsibility for any direct or indirect loss or damage which may occur through use of this product, regardless of any failure to perform on the part of this product.
- Roland DG Corp. assumes no responsibility for any direct or indirect loss or damage which may occur with respect to any article made using this product.

Roland DG Corporation

For the USA

FEDERAL COMMUNICATIONS COMMISSION RADIO FREQUENCY INTERFERENCE STATEMENT

This equipment has been tested and found to comply with the limits for a Class A digital device, pursuant to Part 15 of the FCC Rules.
These limits are designed to provide reasonable protection against harmful interference when the equipment is operated in a commercial environment.
This equipment generates, uses, and can radiate radio frequency energy and, if not installed and used in accordance with the instruction manual, may cause harmful interference to radio communications.
Operation of this equipment in a residential area is likely to cause harmful interference in which case the user will be required to correct the interference at his own expense.

Unauthorized changes or modification to this system can void the users authority to operate this equipment.

For Canada

CLASS A NOTICE

This Class A digital apparatus meets all requirements of the Canadian Interference-Causing Equipment Regulations.

CLASSE A AVIS

Cet appareil numérique de la classe A respecte toutes les exigences du Règlement sur le matériel brouilleur du Canada.

NOTICE

Grounding Instructions

Do not modify the plug provided - if it will not fit the outlet, have the proper outlet installed by a qualified electrician.

Check with qualified electrician or service personnel if the grounding instructions are not completely understood, or if in doubt as to whether the tool is properly grounded.

Use only 3-wire extension cords that have 3-prong grounding plugs and 3-pole receptacles that accept the tool's plug.

Repair or replace damaged or worn out cord immediately.

Operating Instructions

KEEP WORK AREA CLEAN. Cluttered areas and benches invites accidents.

DON'T USE IN DANGEROUS ENVIRONMENT. Don't use power tools in damp or wet locations, or expose them to rain. Keep work area well lighted.

DISCONNECT TOOLS before servicing; when changing accessories, such as blades, bits, cutters, and like.

REDUCE THE RISK OF UNINTENTIONAL STARTING. Make sure the switch is in off position before plugging in.

USE RECOMMENDED ACCESSORIES. Consult the owner's manual for recommended accessories. The use of improper accessories may cause risk of injury to persons.

NEVER LEAVE TOOL RUNNING UNATTENDED. TURN POWER OFF. Don't leave tool until it comes to a complete stop.

CE

ROLAND DG CORPORATION
1-6-4 Shinmiyakoda, Hamamatsu-shi, Shizuoka-ken, JAPAN 431-2103
MODEL NAME : See the MODEL given on the rating plate.
RELEVANT DIRECTIVE : EC LOW VOLTAGE DIRECTIVE (73/23/EEC)
EC ELECTROMAGNETIC COMPATIBILITY DIRECTIVE (89/336/EEC)

WARNING

This is a Class A product. In a domestic environment this product may cause radio interference in which case the user may be required to take adequate measures.

Contents

Features of the SC-545EX 4

To Ensure Safe Use 5

Pour utiliser en toute sécurité 9

Chapter 1: Getting Started 15

1-1 Checking Accessories 16
1-2 Part Names 17
1-3 Assembling and Installing 20
Installation Environment 20
Step 1: Assemble the Stand 21
Step 2: Install the Included Items 23
Step 3: Install the Drain Bottle 24
Step 4: Remove the Protective Media 26
1-4 Connecting the Cables 27
Connecting the Power Cord 27
Connecting to the Computer 28
1-5 Switching On the Power for the First Time 30
Step 1: Install Ink Cartridges 30
Step 2 : Match the Machine to the Environment Where Installed 32
1-6 Installing the Blade 33
Installing a Blade 33
Removing a Blade 35

Chapter 2: Basic Operation 37

2-1 Examples of Operations with This Machine 38
2-2 Switching the Power On and Off 39
Switching On the Power 39
Switching Off the Power at the End of the Day 40
2-3 Loading Media 41
Loading Roll Media 41
Loading Sheet Media 45
When Loading Thick Media (Only When Printing) 46
When Loading Media That Warps Easily (Only When Printing) 47
Separating the Media 48
Removing the Media 48
2-4 Printing 49
To Perform Printing 49
Performing a Printing Test 50
Downloading Printing Data 50
2-5 Cutting 51
To Perform Cutting 51
Test Cutting 52
Downloading Cutting Data 53
2-6 Printing and Cutting 54
Sequence of Operation for Printing and Cutting 54

2-7 Reloading the Media and Performing Cutting 55
Printing Area 55
Printing with Crop Marks 56
Aligning Automatically 56
Aligning Manually 58

Chapter 3: Using the Print Heater 59

3-1 Switching the Print Heater On and Off 60
Switching On the Print Heater 60
Switching Off the Print Heater 60
3-2 Loading Media 61
About the Ambient Temperature During Print Heater Use 61
Points to Observe When Loading Media 61
3-3 Printing and Cutting 62
Printing 62
Cutting/Printing and Cutting 63

Chapter 4: A Wide Variety of Operations 65

4-1 Replacing the Ink Cartridges 66
Care and Handling of Ink Cartridges 66
Replacing with New Ink Cartridges 67
If Ink Runs Out During Printing 68
4-2 Checking the Remaining Ink Level 69
4-3 Setting the Location Where Printing Starts 70
Setting the Start Location 70
4-4 Setting the Margins 72
Setting the Margins in the Feed Direction 72
4-5 Making Corrections for Printing 73
Feed Correction 73
Bidirectional Correction 74
Environment Matching 76
4-6 Making Corrections for Printing and Cutting 77
Adjusting Automatically 77
Adjusting Manually 78
4-7 Stopping Printing or Cutting Operations 80
Stopping Printing or Cutting Operations 80
Pausing Printing or Cutting Operations 80
4-8 Recording the Amount of Remaining Media 81
Displaying the Amount of Remaining Media on the Screen 81
4-9 When Not in Use for a Prolonged Period 82

Chapter 5: Maintenance 83

5-1 Cleaning the Print heads 84
Cleaning the Print heads 84
If Drop-out Persists Even After Carrying Out Cleaning Several Times 85
If Performing POWERFUL Cleaning Several Times Does Not Correct the Drop-out Problem 85
5-2 Cleaning Using the Cleaning Kit 86
5-3 Replacing the Wiper 89
5-4 Other Cleaning Tasks 90

5-5 Disposing of Discharged Ink 91
5-6 How to Replace the Blade 92
5-7 How to Replace the Separating Knife 93
5-8 When Moving the Unit 94
Procedures from Preparing to Move Through Reinstalling 94

Chapter 6: Menus and Keys 97

6-1 Menus Flowchart 98
6-2 Description of Menus 104
6-3 Description of Keys 108

Chapter 7: What to Do If... 111

7-1 What to Do If... 112
The Machine Doesn't Run 112
Clean, Attractive Printing Is Impossible 113
Media Wrinkles or Warps 115
The Media Becomes Jammed 116
What to Do If the Print-head Carriage Does Not Operate 117
7-2 What to Do If an Error Message Appears 119

Chapter 8: Specifications 123

8-1 Media Conditions 124
Usable Media 124
Acceptable Media Width 125
8-2 About the Printing or Cutting Area 126
8-3 The Media-cutoff Location During Continuous Printing 127
8-4 About Blade Life 128
8-5 Locations of the Power Rating and Serial Number Labels 129
8-6 Specifications 130

SOLJET™ and ECO-SOL INK™ are trademarks of Roland DG Corporation.
Other company names and product name are trademarks or registered trademarks of their respective holders.

Copyright © 2004 Roland DG Corporation

Features of the SC-545EX

What Is the SC-545EX?

The SC-545EX is a large-format printer equipped with a cutting feature and combining high speed with high print quality. Not only can it be used either solely for printing or solely for cutting, but it can also perform printing and cutting simultaneously. Also, using the crop-mark feature lets you remove media after printing, then load it again and perform cutting, positioning it accurately. It also achieves better weatherability through the use of ECO-SOL INK.

Built-in Print Server

This machine has a built-in print server (Roland-PrintServer) as a network interface. When you use the print server, you can send printing data to the machine from anywhere on the network.

Built-in Print Heater

This machine has a built-in print heater to improve ink adhesion and speed up drying. This enhances productivity by enabling support for more types of media.

Includes a Software Raster Image Processor (RIP)

Software RIP, which is included with the machine, lets you use your computer to perform raster image processing for printing data such as PostScript files exported from a program and output the data to the machine.

To Ensure Safe Use

About ⚠WARNING and ⚠CAUTION Notices

⚠WARNING	Used for instructions intended to alert the user to the risk of death or severe injury should the unit be used improperly.
⚠CAUTION	Used for instructions intended to alert the user to the risk of injury or media damage should the unit be used improperly. * Media damage refers to damage or other adverse effects caused with respect to the home and all its furnishings, as well to domestic animals or pets.

About the Symbols

	The △ symbol alerts the user to important instructions or warnings. The specific meaning of the symbol is determined by the design contained within the triangle. The symbol at left means "danger of electrocution."
	The ⃠ symbol alerts the user to items that must never be carried out (are forbidden). The specific thing that must not be done is indicated by the design contained within the circle. The symbol at left means the unit must never be disassembled.
	The ● symbol alerts the user to things that must be carried out. The specific thing that must be done is indicated by the design contained within the circle. The symbol at left means the power-cord plug must be unplugged from the outlet.

⚠WARNING

Do not disassemble, repair, or modify.

Doing so may lead to fire or abnormal operation resulting in injury.

Do not use while in an abnormal state (i.e., emitting smoke, burning odor, unusual noise, or the like).

Doing so may result in fire or electrical shock. Immediately switch off first the sub power, then the main power, unplug the power cord from the electrical outlet, and contact your authorized Roland DG Corp. dealer or service center.

Do not operate in a location exposed to open flame, sparking, or static electricity, or in a location exposed to high temperatures, such as in the immediate vicinity of a heater. Also, do not place undried media in such locations.

Doing so may result in fire due to combustion of ink or cleaning liquid.

Do not store ink cartridges, cleaning liquid, or discharged ink in locations such as the following.

- **Near open flame**
- **Locations exposed to high temperatures, such as in the immediate vicinity of a heater**
- **Near bleach, chemicals, explosives, or the like**

Doing so may cause fire.

Do not place any potentially flammable object on the platen while the print heater is in operation.

Doing so may cause fire.

Do not spill combustible liquid over the platen.

Doing so may cause fire.

⚠WARNING

Do not use with any electrical power supply that does not meet the ratings displayed on the unit.
Use with any other power supply may lead to fire or electrocution.

Ground the unit with the ground wire.
Failure to do so may result in risk of electrical shock in the even of a mechanical problem.

Use only with the power cord included with this product.
Use with other than the included power cord may lead to fire or electrocution.

Do not connect the power cord with other electrical loads on a single electrical outlet.
Doing so may generate heat and cause fire.

Do not use with a damaged power cord or plug, or with a loose electrical outlet.
Use with any other power supply may lead to fire or electrocution.

Do not damage or modify the electrical power cord, subject it to excessive bending, twisting, pulling, binding, or pinching, or place any object or weight on it.
Doing so may damage the electrical power cord, leading to fire, electrical shock, or electrocution.

Do not attempt to unplug the power-cord plug with wet hands.
Doing so may result in electrical shock or electrocution.

When unplugging the electrical power cord from the power outlet, grasp the plug, not the cord.
Unplugging by pulling the cord may damage it, leading to fire, electrical shock, or electrocution.

Do not allow liquids, metal objects or flammables inside the machine.
Such medias can cause fire.

⚠CAUTION

Ensure adequate ventilation for the work area.
Failure to do so may result in odor, physical distress, or fire.

Do not allow ink or cleaning liquid to come into contact with eyes or skin. Do not drink or deliberately smell ink or cleaning liquid.
Doing so may be hazardous to your health.

If ink or cleaning liquid comes in contact with the eyes, immediately flush with running water for at least 15 minutes. If eye irritation continues, seek treatment by a physician.

If ink or cleaning liquid is accidentally swallowed, do not induce vomiting, and immediately seek treatment by a physician.

If ink or cleaning liquid comes in contact with the skin, immediately wash well with soap and water. If irritation or inflammation occur, seek treatment by a physician.

If the odor of the ink or cleaning liquid causes physical distress, move to a well-ventilated location and rest quietly. If dizziness or nausea persists, seek treatment by a physician.

When storing discharged ink temporarily, place in the included drain bottle or a durable sealed container such as a metal can and polyethylene tank, and cap tightly.
Leakage of discharged ink or its vapor may result in odor, physical distress, or fire.

Store ink cartridges out of the reach of children.

⚠CAUTION

Install in a level and stable location.
Failure to do so may result in the unit tipping over, leading to injury.

Unpacking, and installation must be carried out by four or more persons.
Otherwise the machine or the stand may fall, resulting in injury.

Use care to avoid pinching the fingers when placing the unit on the stand.
Doing so may result in injury.

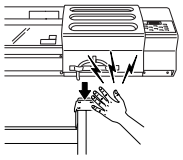

Use the joining screws to secure the unit to the stand.
Failure to do so may result in falling of the unit, leading to injury.

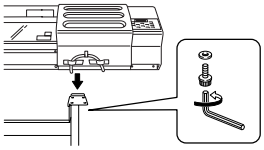

Before switching on the power, be sure to install the drain bottle.
Otherwise discharged fluid may leak from the machine.

Do not place hands within the space to the front of the unit while in operation.
Doing so may result in injury.

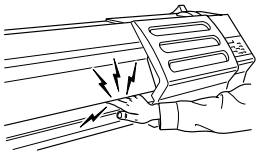

Do not touch the platen when the print heater is operating.
Doing so may cause burns because the platen is hot.

Do not touch the tip of the blade with your fingers.
Doing so may result in injury, and the cutting performance of the blade will be impaired.

Do not touch the tip of the separating knife with your fingers.
Doing so may result in injury.

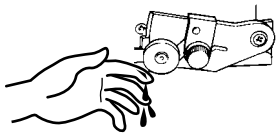

Be sure to install the shafts when loading roll media.
Otherwise the roll may fall and cause injury.

Load roll media at the proper position.
Otherwise the roll may fall, resulting in injury.

Be sure to use the media with a width of 500 mm (19-11/16 in.) or more.
Failure to do so may cause overheating of the print heater, leading to fire.

Do not press the [SEL] key.
Doing so may cause malfunction of the print heater, leading to fire.

Release the caster locks for the stand before attempting to move.
Otherwise the unit may tip over and cause injury.

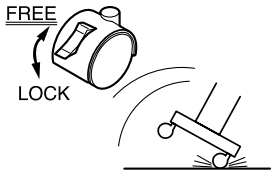

Do not touch the control panel while head cleaning or other cleaning is in progress.
The print-head carriage may move and cause injury.

When cleaning the unit, be sure to wait approximately 30 minutes or more after switching off the power until the temperature of the platen falls sufficiently.
Doing so may cause burns because the platen is hot.

About the Labels Affixed to the Unit

These labels are affixed to the body of this product.
The following figure describes the location and content of these messages.

Front

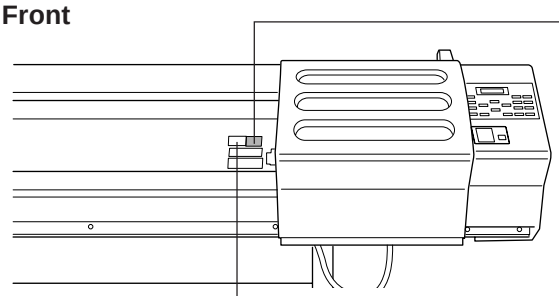

Do not place hands within the space to the front of the unit while in operation.

Ink and discharged ink are flammable. Keep away from open flame.

Ink and discharged ink are toxic. Avoid contact with the body. Use only in a well-ventilated area.

Rear

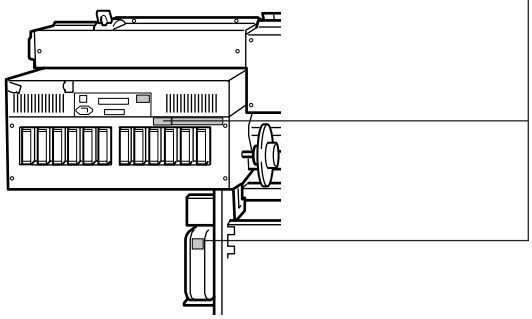

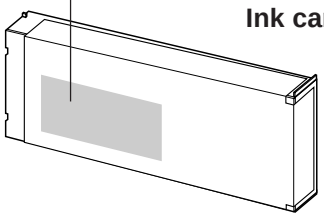

Ink cartridge

Inside the front cover

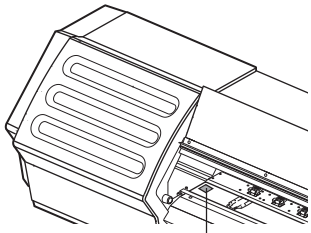

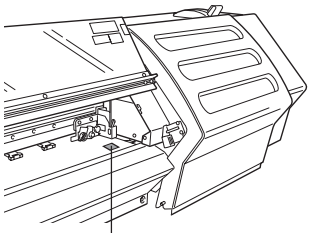

Do not touch the platen. It is hot when the print heater is operating.

In addition to the ⚠**WARNING** and ⚠**CAUTION** symbols, the symbols shown below are also used

Notice : Indicates information to prevent machine breakdown or malfunction and ensure correct use.

Point : Indicates a handy tip or advice regarding use.

Pour utiliser en toute sécurité

Avis sur les avertissements

⚠ATTENTION	Utilisé pour avertir l'utilisateur d'un risque de décès ou de blessure grave en cas de mauvaise utilisation de l'appareil.
⚠PRUDENCE	Utilisé pour avertir l'utilisateur d'un risque de blessure ou de dommage matériel en cas de mauvaise utilisation de l'appareil. * Par dommage matériel, il est entendu dommage ou tout autre effet indésirable sur la maison, tous les meubles et même les animaux domestiques.

À propos des symboles

	Le symbole △ attire l'attention de l'utilisateur sur les instructions importantes ou les avertissements. Le sens précis du symbole est déterminé par le dessin à l'intérieur du triangle. Le symbole à gauche signifie "danger d'électrocution".
	Le symbole ⃠ avertit l'utilisateur de ce qu'il ne doit pas faire, ce qui est interdit. La chose spécifique à ne pas faire est indiquée par le dessin à l'intérieur du cercle. Le symbole à gauche signifie que l'appareil ne doit jamais être démonté.
	Le symbole ● prévient l'utilisateur sur ce qu'il doit faire. La chose spécifique à faire est indiquée par le dessin à l'intérieur du cercle. Le symbole à gauche signifie que le fil électrique doit être débranché de la prise.

⚠ATTENTION

Ne pas démonter, réparer ni modifier.

Démonter, réparer ou modifier l'appareil risque de provoquer un incendie ou de causer un fonctionnement anormal entraînant des blessures.

Ne pas utiliser si l'appareil est dans un état anormal (c'est-à-dire s'il y a émission de fumée, odeur de brûlé, bruit inhabituel etc.).

Le non-respect de cette consigne pourrait provoquer un incendie ou des décharges électriques.

Couper immédiatement l'alimentation secondaire et ensuite l'alimentation principale. Débranchez le fil électrique et contacter votre revendeur ou votre centre de service de la société Roland DG autorisé.

Ne pas utiliser près d'une flamme nue, dans un endroit où se produisent des étincelles ou de l'électricité statique, ni dans un endroit où les températures sont élevées, par exemple à proximité d'un appareil de chauffage.

De plus, il ne faut pas placer le support humide dans de tels endroits car la combustion de l'encre ou du liquide nettoyant peut créer un risque d'incendie.

Ne pas entreposer les cartouches d'encre, le liquide nettoyant ou l'encre usée dans les endroits suivants :

- **près d'une flamme nue,**
- **dans des endroits où les températures sont élevées, par exemple à proximité d'un appareil de chauffage,**
- **près de javellisants, de produits chimiques, d'explosifs ou autres produits semblables.**

⚠ATTENTION

Ne jamais poser d'objets potentiellement inflammables sur la plaque d'exposition lorsque le chauffage fonctionne.
Cela crée un risque d'incendie.

Ne pas répandre de liquide combustible sur la plaque d'exposition.
Cela crée un risque d'incendie.

Ne pas utiliser avec une source d'alimentation électrique non conforme à la norme indiquée sur l'appareil.
Utiliser l'appareil avec une autre source d'alimentation risque de provoquer un incendie ou de causer une électrocution.

Mettre l'appareil à la terre avec le fil de mise à la terre.
Ne pas respecter cette consigne peut créer un risque d'électrocution en cas de panne mécanique.

Utiliser l'appareil uniquement avec le fil électrique fourni.
Utiliser l'appareil avec un autre fil risque de provoquer un incendie ou une électrocution.

Ne pas brancher d'autres appareils dans la même prise que l'appareil.
Ne pas respecter cette consigne risque de causer une surchauffe et de provoquer un incendie.

Ne pas utiliser si le fil ou la fiche électriques sont endommagés; ne pas brancher dans une prise mal fixée.
Négliger de suivre cette consigne risque de provoquer un incendie ou decauser une décharge électrique ou une électrocution.

Ne pas endommager ni modifier le fil électrique. Ne pas le plier, le tordre, l'étirer, l'attacher ou le serrer de façon excessive. Ne pas placer d'objet ou de poids sur le fil.
Négliger de suivre cette consigne peut endommager le fil électrique, ce qui risque de provoquer un incendie ou de causer une décharge électrique ou une électrocution.

Ne pas débrancher le fil avec des mains mouillées.
Ne pas respecter cette consigne risque de provoquer des décharges électriques ou une électrocution.

Pour débrancher l'appareil, saisir la fiche et non le fil électrique.
Tirer sur le fil peut l'endommager, ce qui risque de provoquer un incendie ou de causer une décharge électrique ou une électrocution.

Ne pas introduire de liquide, d'objet métallique ou inflammable dans l'appareil.
Ce genre dematériel peut provoquer un incendie.

⚠PRUDENCE

S'assurer que le lieu de travail est bien aéré.
Sinon, des odeurs fortes peuvent se dégager et il y a risque de malaises physiques ou d'incendie.

Ne pas mettre le liquide nettoyant en contact avec les yeux ou la peau. Ne pas boire ou ni respirer délibérément l'encre ou le liquide nettoyant.
Cela est dangereux pour la santé.

Si de l'encre ou le liquide nettoyant viennent en contact avec les yeux, rincer immédiatement à l'eau courante pendant au moins 15 minutes. Si les yeux sont toujours irrités, consulter un médecin.

Si de l'encre ou du liquide nettoyant sont avalés accidentellement, ne pas provoquer le vomissement, et consulter un médecin immédiatement.

Si de l'encre ou du liquide nettoyant entrent en contact avec la peau, immédiatement laver à fond avec de l'eau et du savon. Si la peau devient irritée ou inflammée, consulter un médecin.

Si l'odeur de l'encre ou du liquide nettoyant cause un malaise physique, amener immédiatement la personne dans un endroit bien aéré et la laisser se reposer. Si l'étourdissement ou les nausées persistent, consulter un médecin.

Pour entreposer temporairement l'encre usée, la placer dans un solide contenant scellé, par exemple un contenant en métal et un réservoir en polyéthylène, et fermer hermétiquement.
Les fuites d'encre usée ou la vapeur qui s'en échappe peuvent causer des odeurs fortes, des malaises physique ou un incendie.

Ranger les cartouches d'encre hors de portée des enfants.

Installer sur une surface stable et de niveau.
Sinon, l'appareil risque de se renverser et de causer des blessures.

Le déballage, l'installation et le déplacement de l'appareil doivent être effectués par quatre personnes ou plus.
Le non-respect de cette consigne pourrait causer des défauts dans l'appareil entraînant des blessures.

Manipuler avec précaution pour éviter de se coincer les doigts lors de l'installation de l'appareil sur le support.
Une négligence à ce niveau pourrait provoquer des blessures.

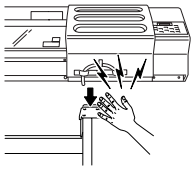

Utiliser les vis fournies pour bien fixer l'appareil sur le support.
Le non-respect de cette consigne pourrait causer des défauts dans l'appareil entraînant des blessures.

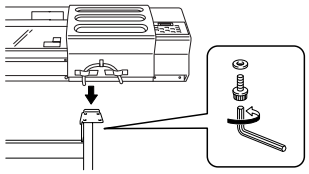

Avant de mettre la machine sous tension, installer la bouteille de vidange, sinon du liquide peut fuir de la machine.

Ne pas mettre les mains dans l'espace du devant quand l'appareil est en marche.
Une négligence à ce niveau pourrait provoquer des blessures.

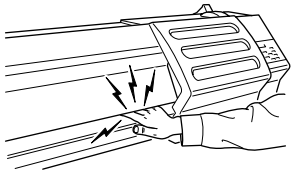

⚠PRUDENCE

Ne pas toucher la plaque d'exposition lorsque le chauffage fonctionne.

La plaque étant très chaude, il est possible de se brûler.

Ne pas toucher à l'extrémité de la lame avec vos doigts.

Une négligence à ce niveau pourrait provoquer des blessures.

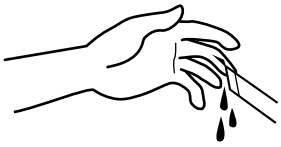

Ne pas toucher le bout de la lame séparatrice avec les doigts.

Une négligence à ce niveau pourrait provoquer des blessures.

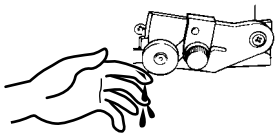

Ne pas oublier d'installer la barre quand un rouleau est chargé.

Le rouleur peut tomber et causer des blessures.

Le rouleau doit être placé quand la barre est en position adéquate.

Une négligence à ce niveau pourrait provoquer la chute du rouleau et causer des blessures.

Toujours utiliser un support d'au moins 500 mm.

Le chauffage risque sinon de trop chauffer, ce qui peut entraîner un incendie.

Ne pas appuyer sur la touche [SEL].

Ceci peut causer une panne de chauffage et entraîner un incendie.

Débloquer le mécanisme d'arrêt des roulettes du support avant de le déplacer.

Sinon l'appareil pourrait se renverser et provoquer des blessures.

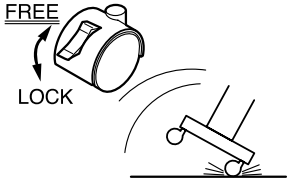

Ne pas toucher le panneau de commande pendant le nettoyage des têtes ou d'autres pièces.

Le chariot d'impression peut bouger et causer des blessures.

Avant de nettoyer le bloc de chauffage, attendre au moins 30 minutes après l'extinction du chauffage et de l'alimentation secondaire de l'imprimante pour que la température de la plaque d'exposition soit suffisamment basse.

La plaque étant très chaude, il est possible de se brûler.

À propos des étiquettes collées sur l'appareil

Ces étiquettes sont collées à l'extérieur de l'appareil.
Les dessins suivants indiquent l'endroit et le contenu des messages.

Avant

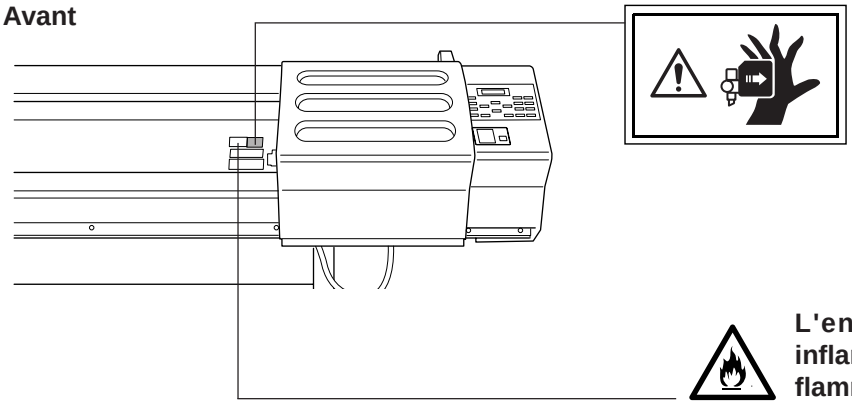

Ne pas mettre les mains dans l'espace devant l'élément quand celui-ci est en marche.

L'encre et l'encre usée sont inflammables. Les garder loin de toute flamme nue.

L'encre et l'encre usée sont toxiques. Éviter tout contact avec le corps. Utiliser uniquement dans un endroit bien aéré.

Arrière

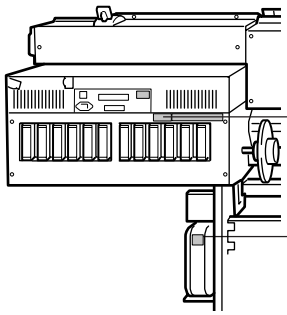

La cartouche d'encre

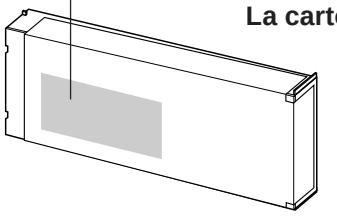

Intérieur de le couvercle de l'imprimante

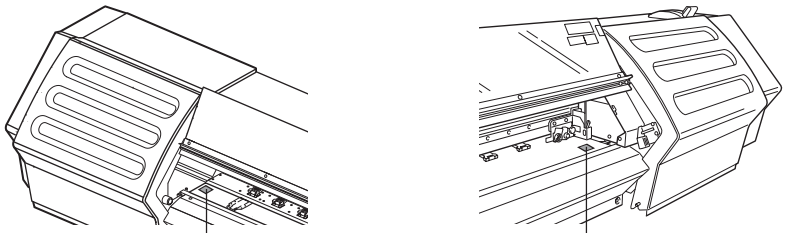

Ne pas toucher la plaque d'exposition lorsque le chauffage fonctionne. La plaque étant très chaude.

Chapter 1: Getting Started

This section describes what to do when you first open the packing carton, including installing the machine and connecting it to a computer.

1-1 Checking Accessories

The following items are packed together with the unit. Make sure they are all present and accounted for.

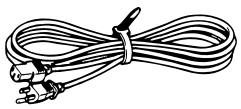

Power cord : 1

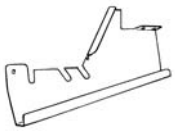

Arm (Right) : 1

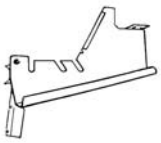

Arm (Left) : 1

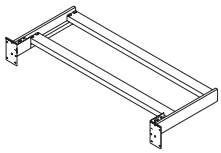

Stand leg: 1

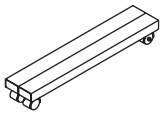

Casters : 2

Shafts : 2

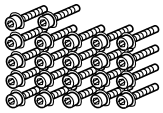

Bolts (Large) : 22

Bolts (Small) : 8

Washers: 6

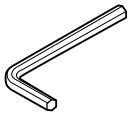

Hexagonal wrench : 1

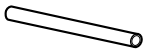

Pipe : 1

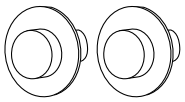

Media flanges : 2

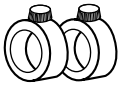

Stoppers : 2

Blade : 1

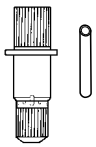

Blade holder : 1
Pin : 1

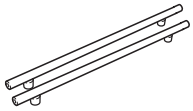

Transport bars : 2

Drain bottle : 1

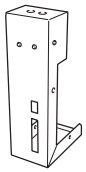

Bottle stand : 1

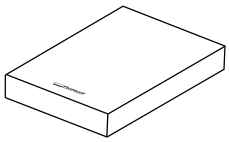

Software RIP : 1

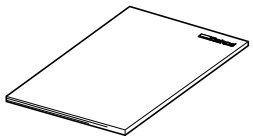

User's manual : 1

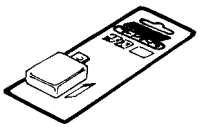

Replacement blade for separating knife : 1

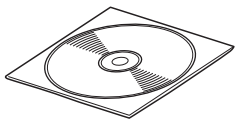

Roland-PrintServer CD-ROM : 1

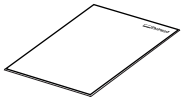

Roland PrintServer Network Settings Guide : 1

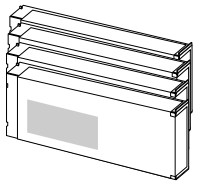

SOL INK Cleaning Cartridges : 4

Cleaning kit

Cleaning sticks : 10

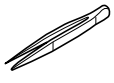

Tweezers : 1

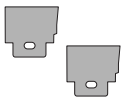

Wipers : 2

1-2 Part Names

Front View

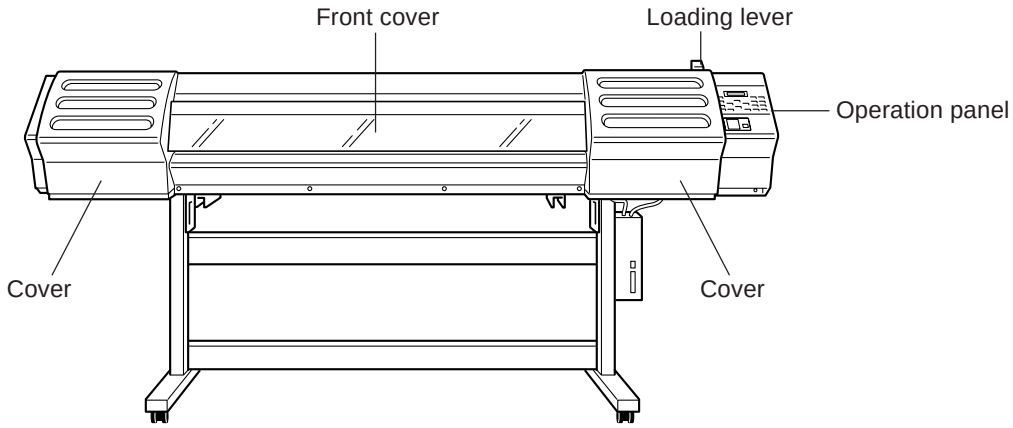

Rear View

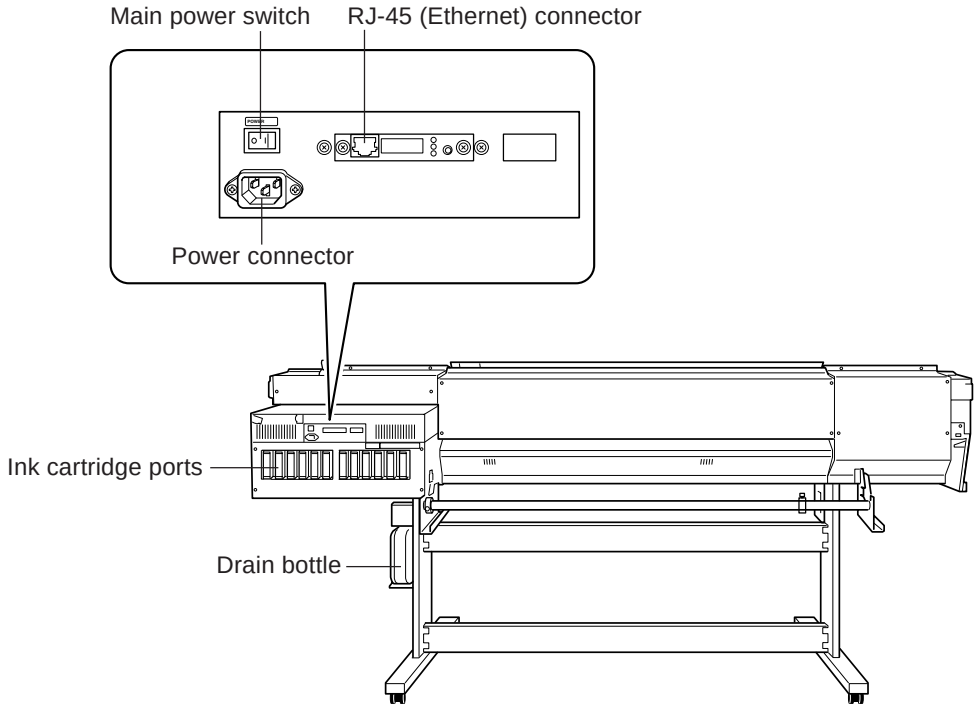

Inside the Front Cover

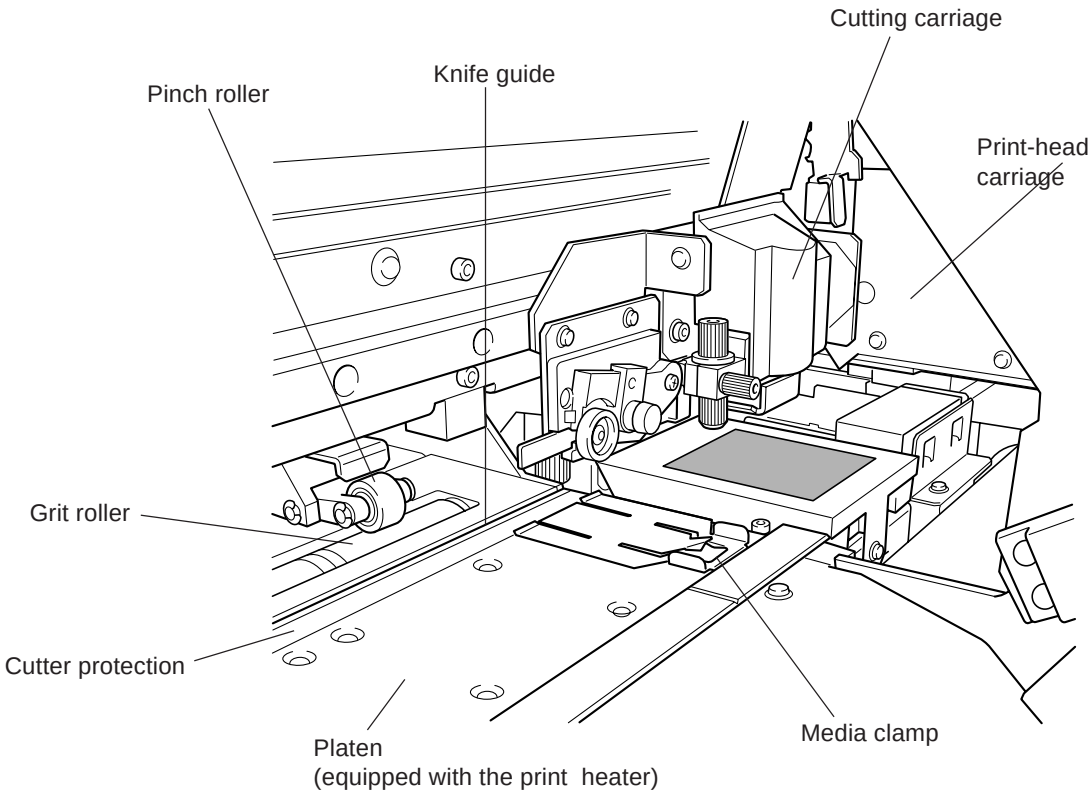

Operation Panel (1)

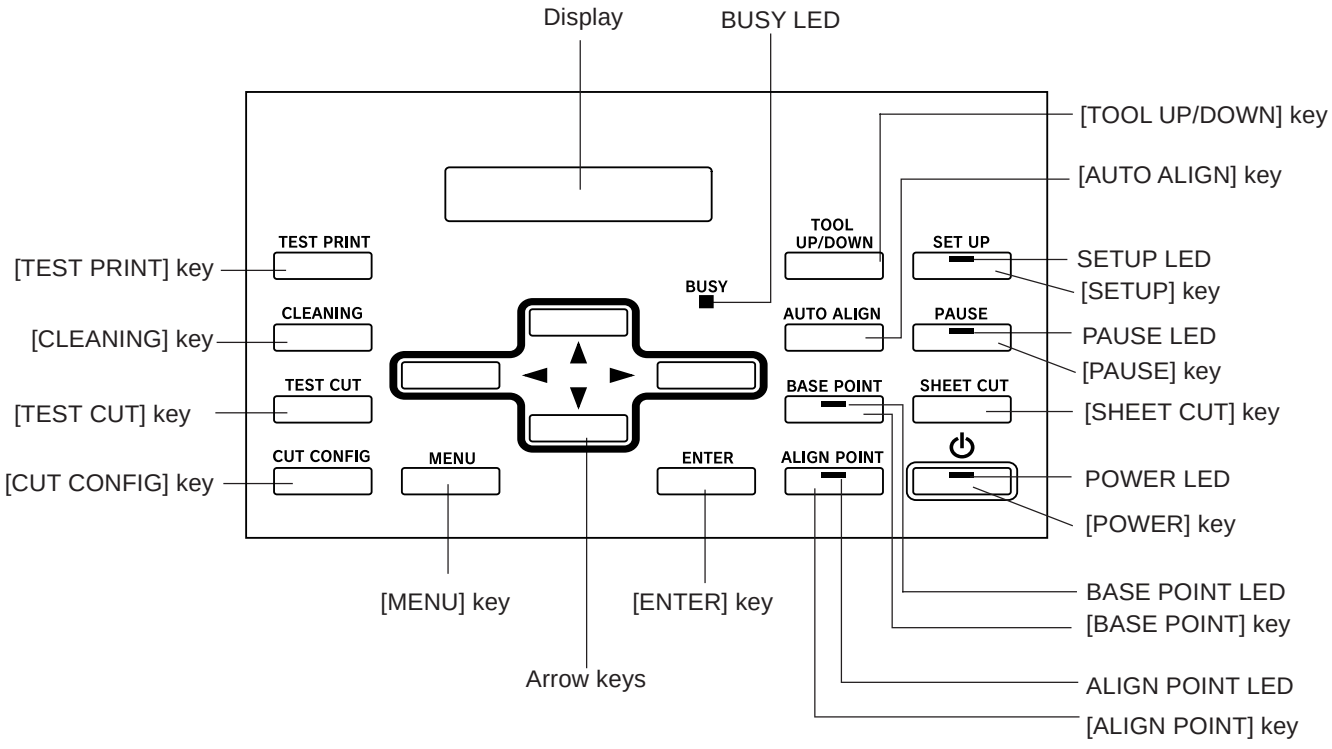

Operation Panel (2)

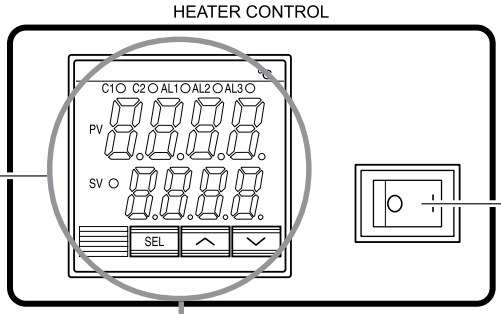

Temperature display panel

Print-heater power switch

Point

The print heater operates only when both the print-heater power switch and the sub power are switched on.

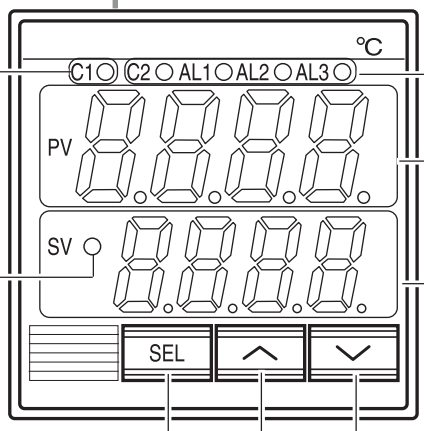

[C1] Indicator
This indicator lights when the print heater is operating. It goes dark when the temperature reaches the preset temperature and the print heater stops operating.

This indicator lights when the print heater is switched on.

Indicators other than [C1] do not light.

PV (actual temperature)
This shows the current temperature of the print heater. It displays error messages in the event of a problem in the print heater.

SV (preset temperature)
This shows the preset temperature of the print heater. The numerals flash when only the power switch for the print heater is switched on.
The numerals remain steadily lit when the print-heater power switch and the sub power are both switched on.

[SEL] Key

Do not press the [SEL] key.
Doing so may cause malfunction of the print heater, leading to fire or electrical shock.

[﹀] Key
Pressing this key one time increases the preset temperature by 1 ºC.

[﹀] Key
Pressing this key one time lowers the preset temperature by 1 ºC.

1-3 Assembling and Installing

Do not operate in a location exposed to open flame, sparking, or static electricity, or in a location exposed to high temperatures, such as in the immediate vicinity of a heater. Also, do not place undried media in such locations.
Doing so may result in fire due to combustion of ink or cleaning liquid.

Ensure adequate ventilation for the work area.
Failure to do so may result in odor, physical distress, or fire.

Unpacking, and installation must be carried out by four or more persons.
Otherwise the machine or the stand may fall, resulting in injury.

Install in a level and stable location.
Otherwise the unit may tip over and cause injury.

Use care to avoid pinching the fingers when placing the unit on the stand.
Doing so may result in injury.

Use the joining bolts to secure the unit to the stand.
Failure to do so may result in falling of the unit, leading to injury.

Installation Environment

Notice

Never install the unit in any of the following situations, as it could result in breakdown or faulty operation:

- Places with excessive electrical noise.
- Places with excessive humidity or dust.
- Places with poor ventilation, because this machine generates considerable heat during operation.
- Places with excessive vibration.
- Places exposed to strong illumination or direct sunlight.

Never stand on the stand legs. Doing so may damage them.

Do not place objects on the unit, as doing so may result in breakdown.

The required installation spaces for this model is below.

3700 (W) x 2000 (D) x 1800 (H) mm (146 (W) x 79 (D) x 71 (H) in.)

Step 1: Assemble the Stand

First assemble the stand, then mount the machine on top of the stand.

1 Invert the stand legs as shown in the figure. While supporting the stand legs with your hand, attach the left- and right-hand casters.

> **Point**
>
> Tighten the bolts securely. Loose bolts may cause the stand to wobble.

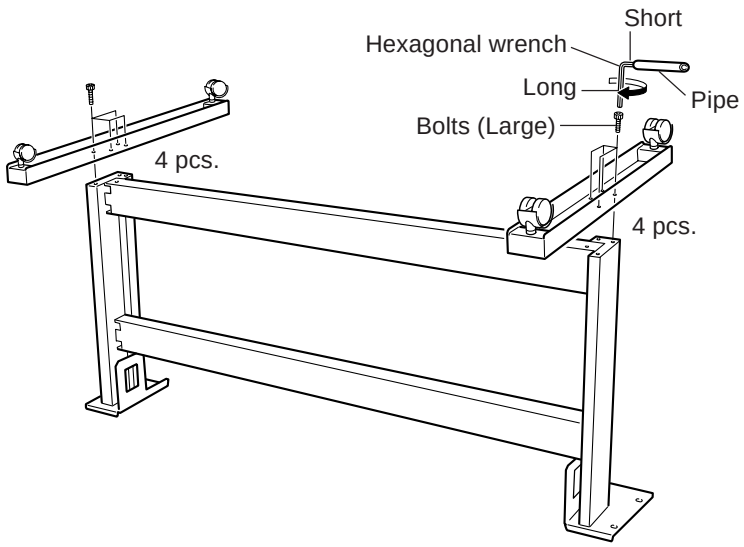

2 Set the stand upright so that the casters are at the bottom, and place the machine on the stand. The front and rear of the stand are as shown in the figure.

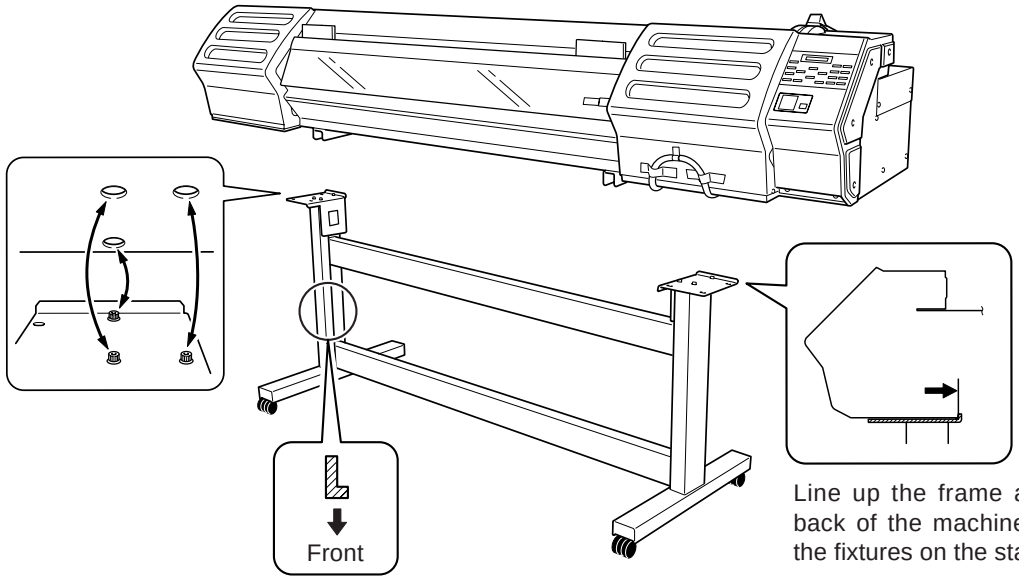

Line up the frame at the back of the machine with the fixtures on the stand.

3 Use the included large bolts to secure the machine to the stand.

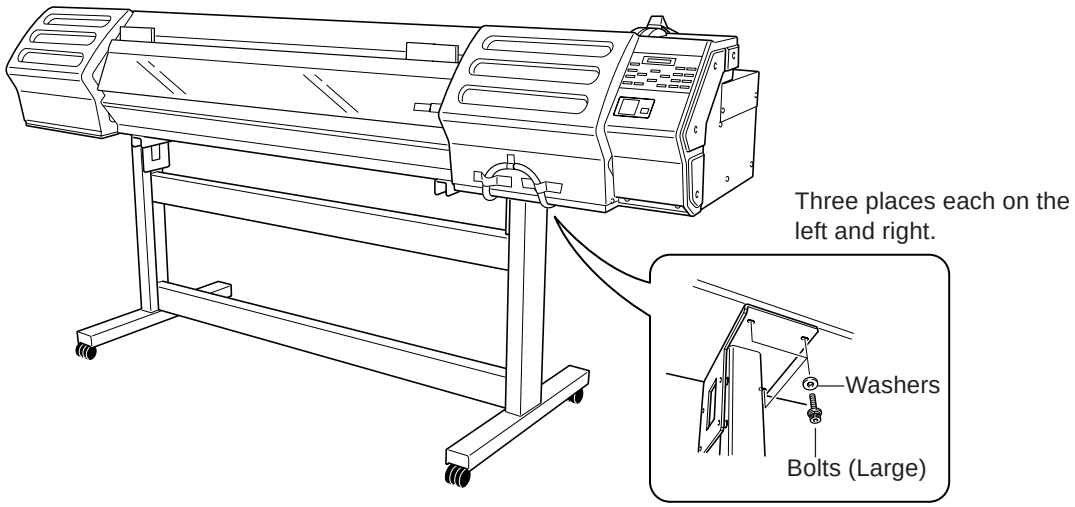

Step 2: Install the Included Items

1 Attach the arms onto the back of the machine at the locations shown in the figure.

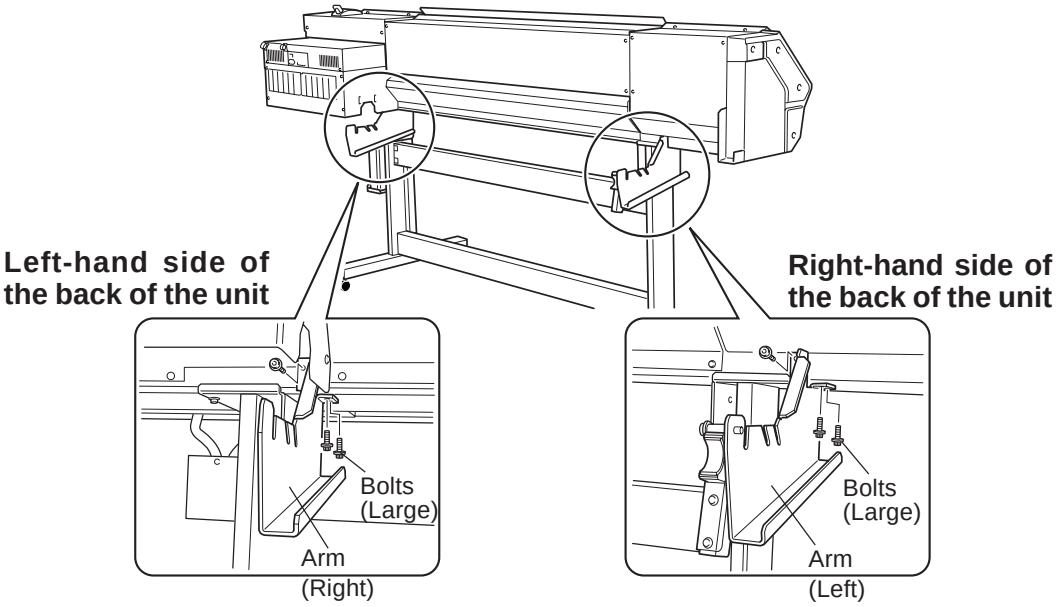

2 Pass the stoppers onto both ends of the shaft.

When passing the shaft through the stopper, be sure to loosen the screws on the stopper first.

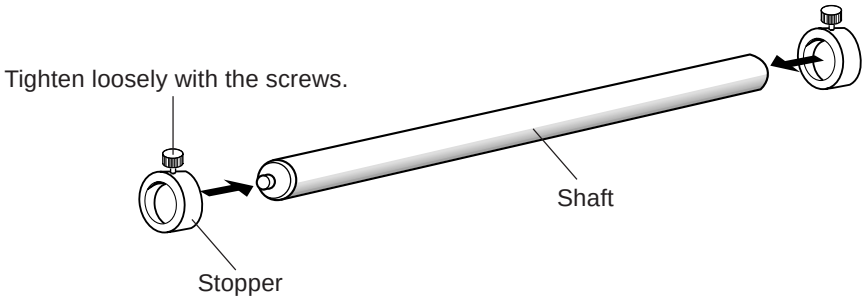

3 Attach the two shafts and engage the brake. Install the shafts so that the one with the stopper is in front of the back of the machine.

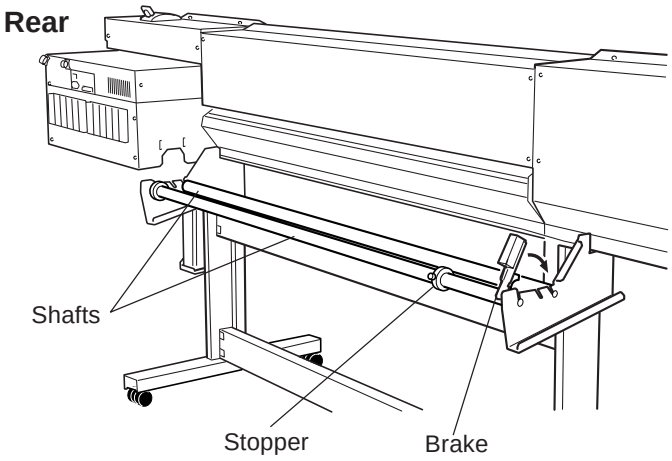

Point

Make sure the shaft brake is engaged. Using the machine with the brake disengaged may result in unstable media feed, leading to poor image quality.

Step 3: Install the Drain Bottle

Point

Leave the drain bottle attached at all times, removing it only when moving the machine or disposing of collected ink.

1 Use the included large bolts to secure the bottle stand in place.

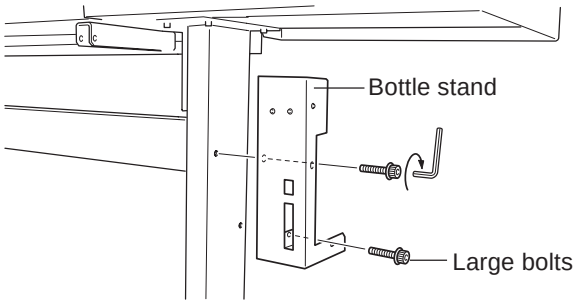

2 Remove the stopper from the drain tube.

Notice

When you remove the stopper from the drain tube, discharged fluid used in shipping inspection may be released from inside the tube. Exercise caution.

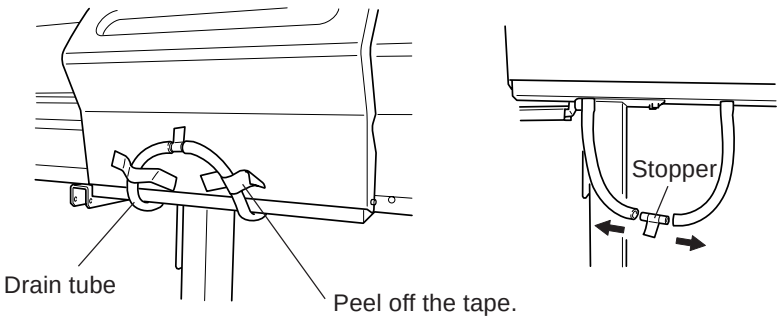

3 Insert the drain tube securely into the bottle stand.

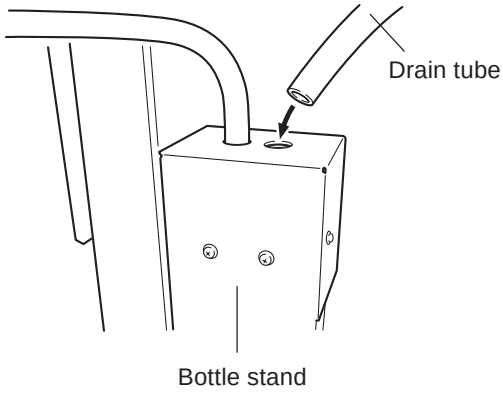

4 Remove **BOTH** the lid and the inner cover from the drain bottle.
Attach the drain bottle to the back of the machine.

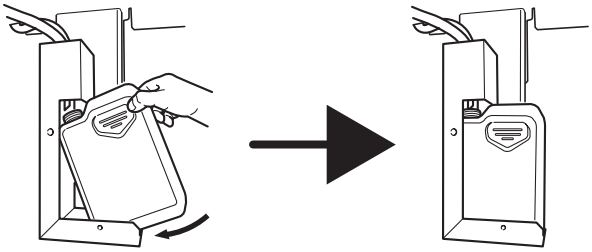

Point

For more information about how to dispose of discharged ink.

☞ "5-5 Disposing of Discharged Ink"

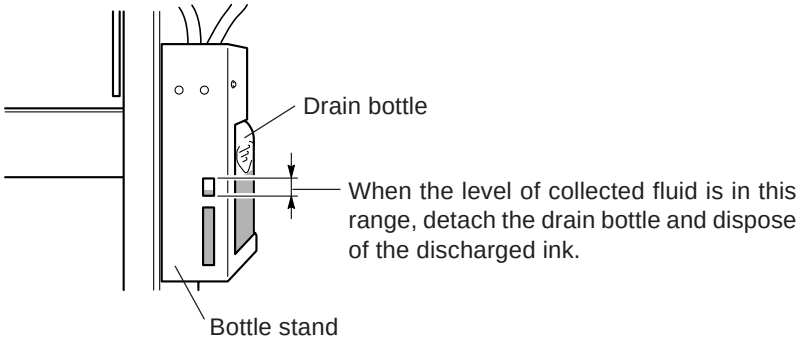

Step 4: Remove the Protective Media

The protective media shown below is attached to this machine when it is shipped from the factory. When you have finished installing the machine, remove all protective media.

Front

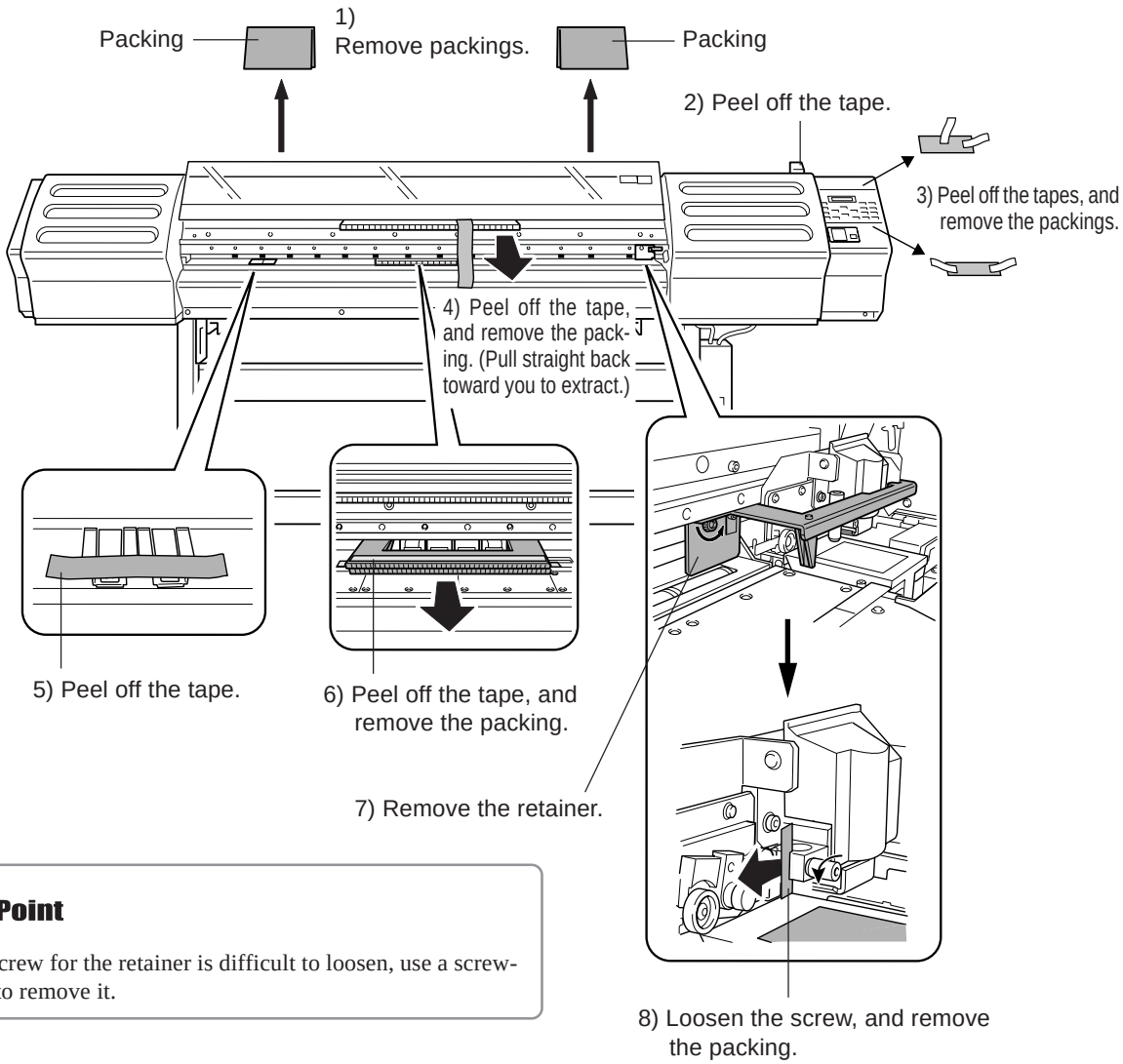

Point

If the screw for the retainer is difficult to loosen, use a screwdriver to remove it.

Rear

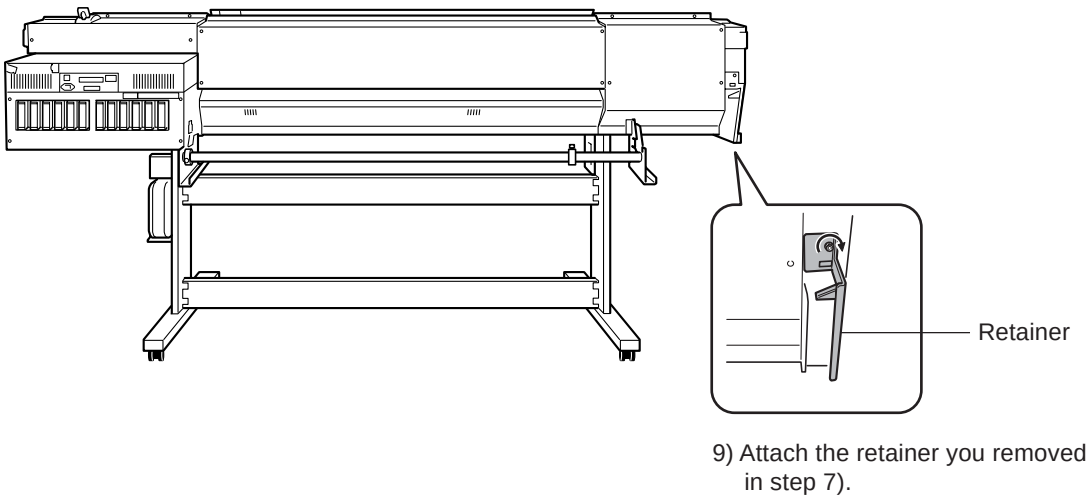

1-4 Connecting the Cables

Use only with a power supply of the same rating as indicated on the unit.
Use with any other power supply may lead to fire or electrocution.

Ground the unit with the ground wire.
Failure to do so may result in risk of electrical shock in the even of a mechanical problem.

Use only with the power cord included with this product.
Use with other than the included power cord may lead to fire or electrocution.

Do not connect the power cord with other electrical loads on a single electrical outlet.
Doing so may generate heat and cause fire.

Connecting the Power Cord

Notice

Be sure to use an electrical outlet for the power supply. Also, do not connect multiple electrical loads on a single electrical outlet. Low or unstable voltage may result in inadequate print heater performance. If the temperature of the print heater fails to rise adequately even when used correctly, check the voltage of the power supply.

Securely connect the power cord, computer I/O cable and so on so that they will not be unplugged and cause failure during operation. Doing so may lead to faulty operation or breakdown.

Before connecting the cable, make sure the computer's power and the main power switch of the unit are switched off.

Arrange the power cord and interface connection cable to prevent tripping when moving around the unit.

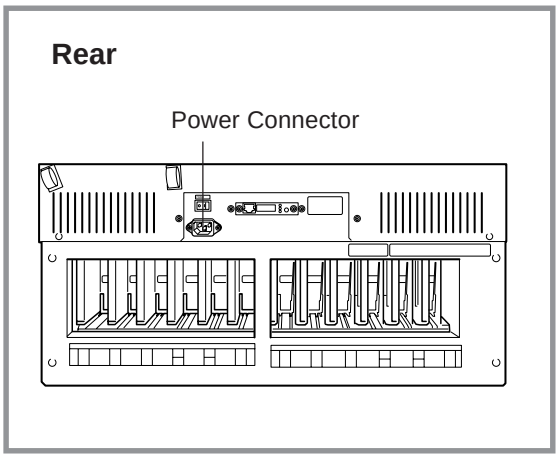

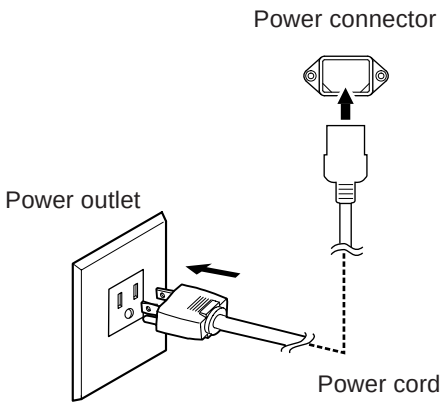

Connecting to the Computer

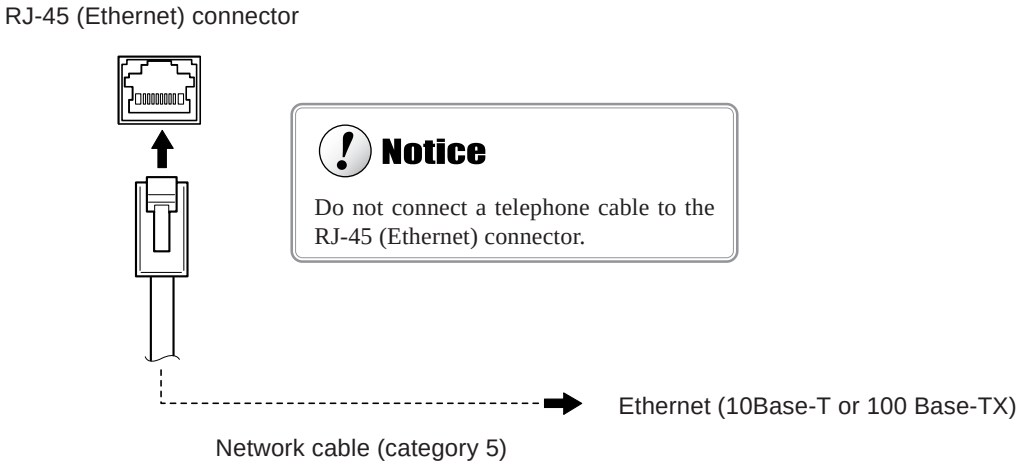

Various settings are required when using this machine in a network environment. For more information, see the "Roland-PrintServer Network Settings Guide".

* Cables are available separately. One which you are sure matches the model of computer being used should be selected.

Securing the Cable

Notice

Pass the cable through the established location, making sure that it does not touch the loaded media.
If the cable touches the media during printing, media feed may be obstructed, resulting in poor printing accuracy.

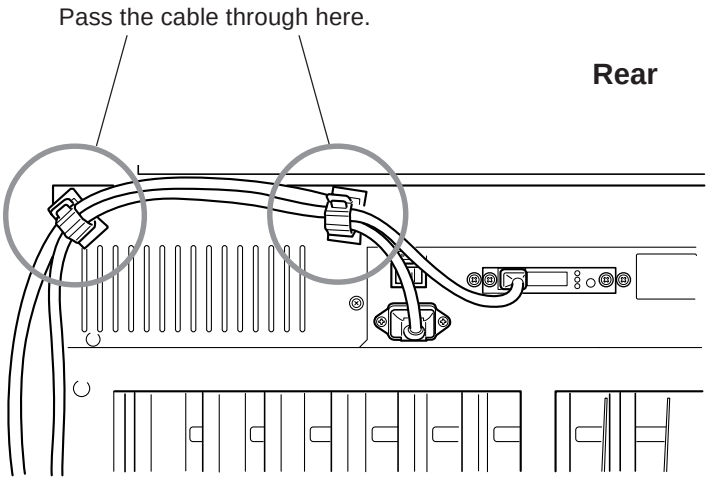

1-5 Switching On the Power for the First Time

Step 1: Install Ink Cartridges

Store ink cartridges out of the reach of children.

If ink or cleaning liquid comes in contact with the eyes, immediately flush with running water for at least 15 minutes.

Notice

If an ink cartridge is dropped, the shock due to the fall may damage the ink cartridge and make it unusable.

When installing and removing an ink cartridge, do not rush. Detach the cartridge gently. Sudden movement when detaching may cause ink to be spilled.

Use only ECO-SOL INK. Do not insert any other type of ink cartridge.

Confirming the Ink-insertion Sites

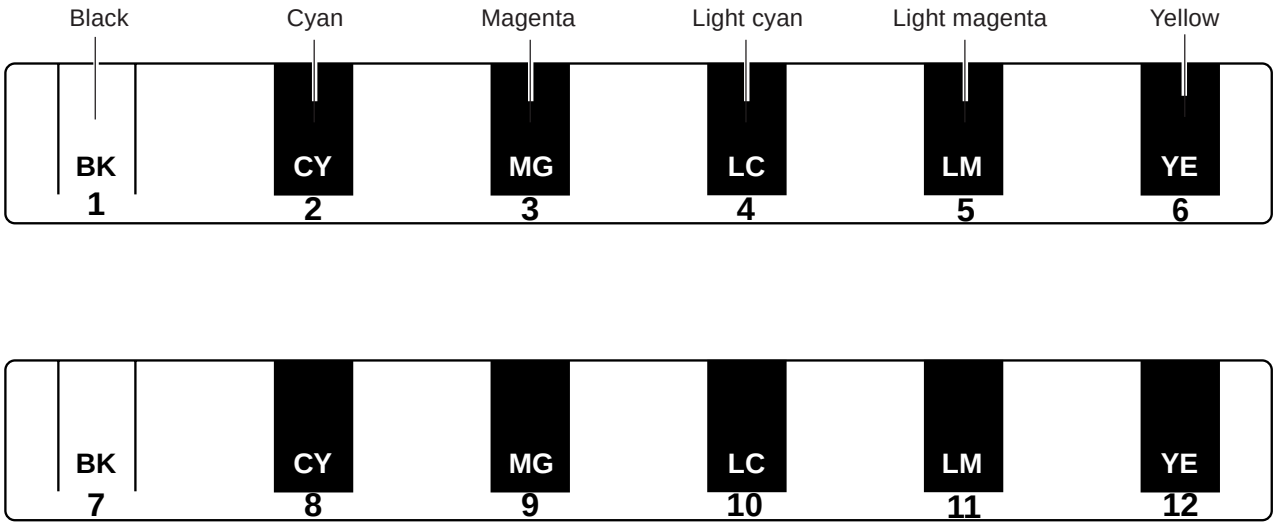

Filling Ink

Installing ink cartridges for the first time after purchase requires four unused SOL INK cleaning cartridges. This is also the case when you are draining ink in preparation for transport, then reinstalling the ink cartridges.

1 Switch on the main power on the back of the machine.

2 Press the [POWER] key on the operation panel.

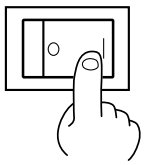

3 Check the type of ink to install, then press the [ENTER] key.

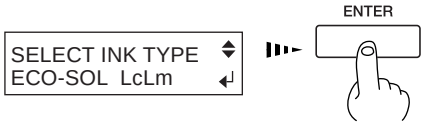

4 Follow the messages to make sure the drain bottle is installed at the back of the machine.

5 Insert cleaning cartridges into the ink-cartridge ports shown by flashing on the display.

Cleaning starts. The cartridges are inserted and removed while the operation is in progress. Follow the messages on the display to carry out the procedure.

Cleaning may take some time.

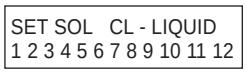

6 When cleaning ends, the following message appears. Follow the instructions given in the message to remove the cleaning cartridges.

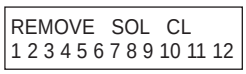

7 Empty the drain bottle and press the [ENTER] key.

> **Point**
>
> For more information about how to dispose of discharged ink, see "5-5 Disposing of Discharged Ink."

8 Before you insert the ink cartridges for each color, gently shake the cartridges.

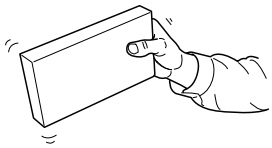

9 Firmly insert the ECO-SOL INK cartridges for each of the colors as far as they will go.

Ink filling starts. When this screen appears, filling ink is finished.

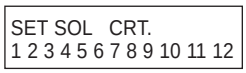

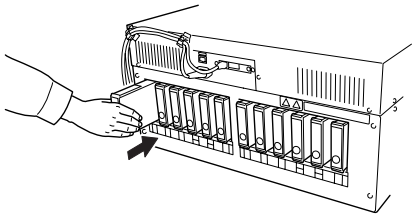

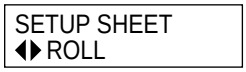

Step 2 : Match the Machine to the Environment Where Installed

The machine performs automatic adjustment to optimize its state to the environment where it is used (temperature and humidity).
Performing automatic adjustment reduces misalignment in the scanning direction (the direction of movement of the carriage) during printing and cutting.

1 Press the [MENU] key, and press the [▼] key to make the following screen appear on the display.

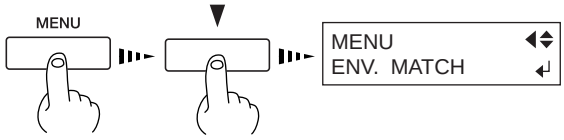

2 Pull back the loading lever and press the [ENTER] key.

The print-head carriage moves and the printing length in the carriage-movement direction is adjusted.

3 When this screen appears, press the [ENTER] key.

Press the [◀] key to go back to the original screen.

4 Flip the loading lever to the rear.

1-6 Installing the Blade

Do not touch the tip of the blade with your fingers.
Doing so may result in injury, and the cutting performance of the blade will be impaired.

Notice

Do not leave the tool mounting screws tightened. Tightening the screw makes it more difficult to install the blade holder.

Installing a Blade

1 Insert the push-pin into the blade holder.

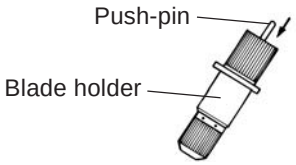

2 Insert a blade into the blade holder until it snaps into place with an audible click.

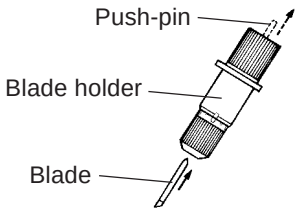

3 Press the [MENU] key, and press the [▼] key to make the following screen appear on the display.

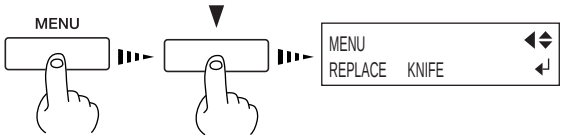

4 Press the [ENTER] key to make the following screen appear on the display.

When the screen shown in the figure appears, the print-head carriage simultaneously moves to the left.

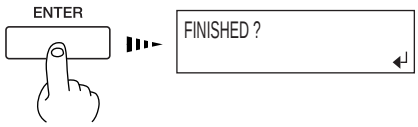

5 Open the front cover, loosen the screw in the figure.

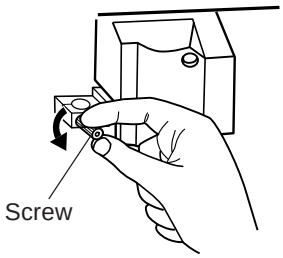

6 Support the tool-securing screw from below and install the blade holder.

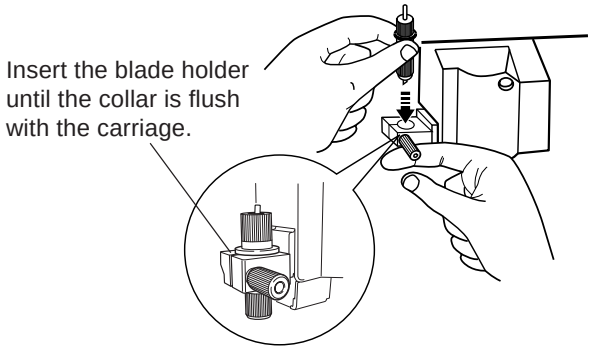

> **Notice**
>
> Be sure to support the tool mounting screw from below when installing the blade holder. Cutting quality may become poor if installed without supporting the screw in this way.

7 Tighten the screw.

Tug the blade holder upward to make sure it does not come loose.

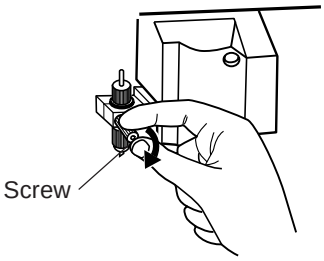

8 Close the front cover, and press the [ENTER] key.

Removing a Blade

1 Press the [MENU] key, and press the [▼] key to make the following screen appear on the display.

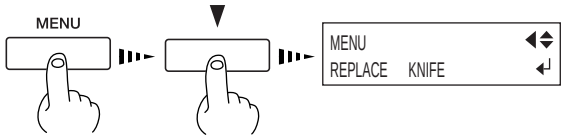

2 Press the [ENTER] key to make the following screen appear on the display.

When the screen shown in the figure appears, the printhead carriage simultaneously moves to the left.

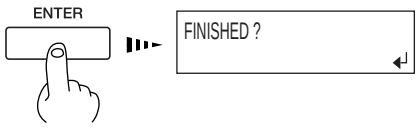

3 Open the front cover, loosen the screw in the figure, and remove the blade holder from the cutting carriage.

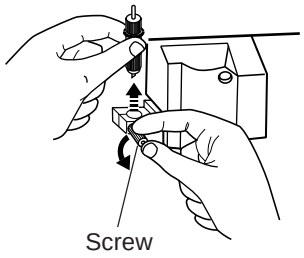

4 Remove the blade.

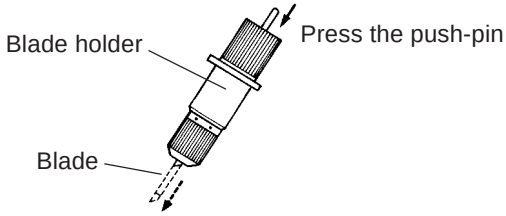

5 Close the front cover, and press the [ENTER] key.

Chapter 2:
Basic Operation

This describes the sequence of basic operations from switching on the power to performing printing or cutting.

2-1 Examples of Operations with This Machine

You can perform a wide variety of operations with this machine. For example, you can perform only printing, perform only cutting, or perform printing and cutting, or even perform printing, then remove the media, laminate it, and then cut it.

The results of operations such as printing only or cutting only differ depending on the settings used to send the data from the raster image processor (RIP). For information on how to make the RIP settings, refer to the documentation for the RIP you're using.

For detailed information about the different operations, refer to the following sections of this manual.

- Performing printing only ☞ "2-4 Printing"
- Performing cutting only ☞ "2-5 Cutting"
- Performing printing and cutting ☞ "2-6 Printing and Cutting"
- Removing the media after printing, then reloading it and performing cutting ☞ "2-7 Reloading the Media and Performing Cutting"
- Using the print heater ☞ "Chapter 3: Using the Print Heater"

2-2 Switching the Power On and Off

Switching On the Power

Leave the main power switch turned on, and use the [POWER] key to switch the power on and off in day-to-day use.

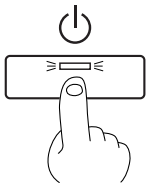

Notice

Points to Keep in Mind When Switching the Power On and Off

Do not switch off the main power while the sub power is switched on. The print heads may be left uncapped (that is, the printing carriage may remain over the platen). If the machine is allow to stand to with the print heads uncapped for a prolonged period, the print heads may become irreversibly clogged.
Before switching off the main power, be sure to hold down the [POWER] key for one second or longer to switch off the sub power.

If the printing carriage stops while over the platen, press the [POWER] key to reset the power. The printing carriage moves and the print heads are capped.
If the printing carriage does not move even when you reset the power using the [POWER] key, refer to "7-1 What to Do If" and see "What to Do When the Print Head Carriage Does Not Move."

Switching Off the Power at the End of the Day

Press and hold down the [POWER] key for one second or longer to switch off the sub power.

The POWER LED goes out

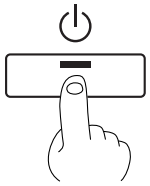

Notice

Leave the pinch rollers raised when not in use.
Deformation may occur if left lowered for a prolonged period.

Raise

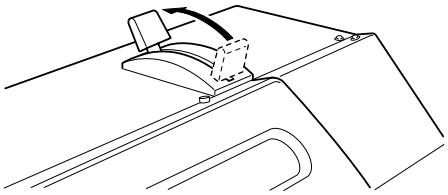

2-3 Loading Media

Be sure to install the shafts when loading roll media.
Otherwise the roll may fall and cause injury.

Load roll media at the proper position.
Otherwise the roll may fall, resulting in injury.

Notice

Do not touch the rail or the inner side of the left and right cover. Touching the area shown may cause the fingers to be soiled by grease or ink, and may result in diminished image quality.

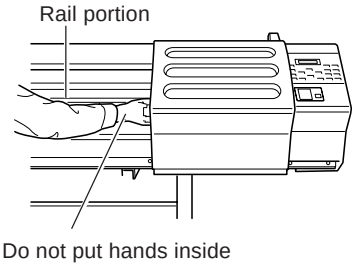

Loading Roll Media

1 Open the front cover.

2 Move the media clamps to the left side of the platen.

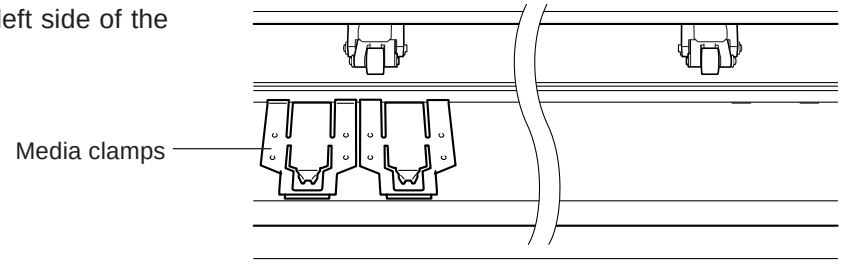

3 Align the media flange with the roll media edges, matching the roll media center ID.

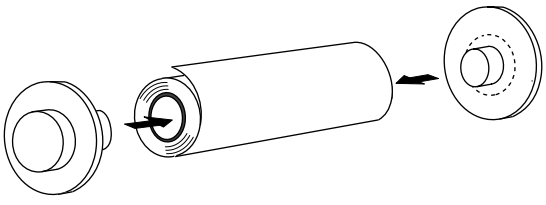

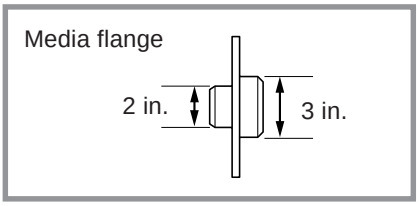

4 Place the rolled media on the shafts.

Pass the end of the media between the pinch rollers and the grit rollers so that it extends from the front of the unit.

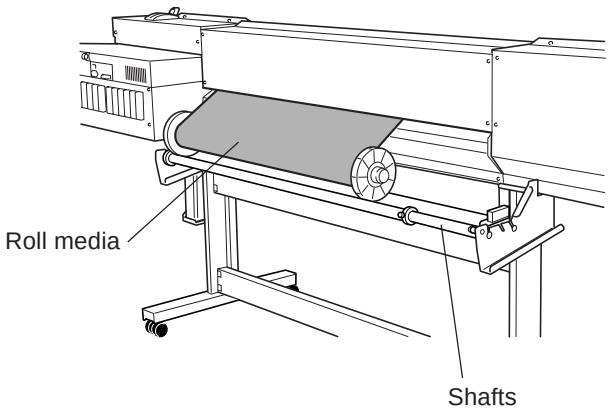

5 When viewed from the front, align so that the left-hand edge of the media is above any of the grit rollers and the right-hand edge is above any of the three grit rollers of the right side of the main unit.

Align the media so that it is straight, and move pinch rollers so that they are above the grit rollers. And position the left and right pinch rollers at the two edges of the media. Position one (or both) middle pinch rollers so as to form equally spaced intervals along the width of the media.

The positions of the pinch rollers change according to the size of the media that is loaded. Refer to "8-1 Media Conditions" and see "Acceptable Media Width."

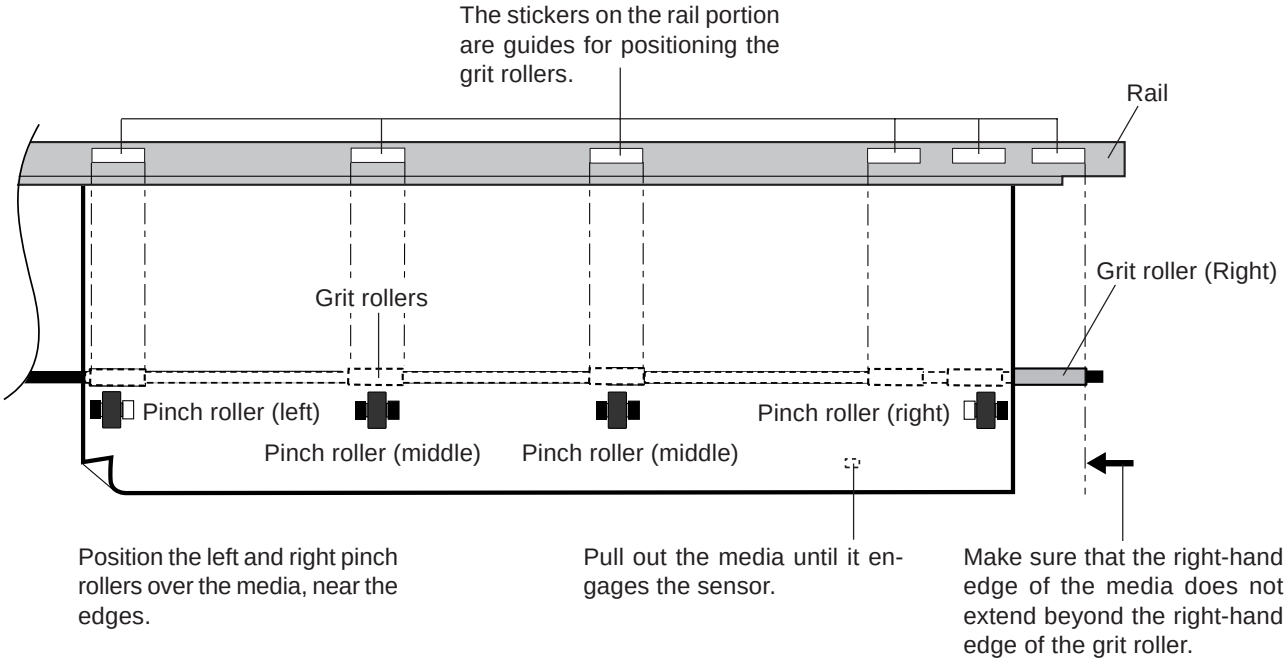

Point

Using the Middle Pinch Rollers

Use the middle pinch rollers as required. When a wide media is loaded, using the middle pinch rollers keeps media feed stable.
When using: Position it over the grit rollers.
When not using: Move it to a position away from the grit rollers. When in this state, the media is not clamped even when the loading lever is lowered.

6 Align the left- and right-hand stoppers with the width of the media and tighten the screws to secure in place.

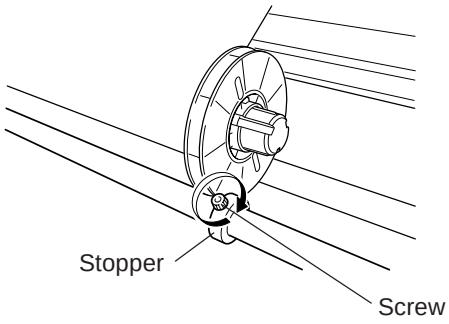

7 Pull out the media so that at least 50 cm (20 in.) hangs down at the front of the machine.

8 Rotate the media flanges on the shaft to take up the hanging media at the front of the machine.

When you roll back the media until the sensor comes into view, a tight seal is formed between the media and the platen, and the media is stretched taut.

To ensure that the media take-up is not crooked, clear of items such as the media clamps that may obstruct media feed.

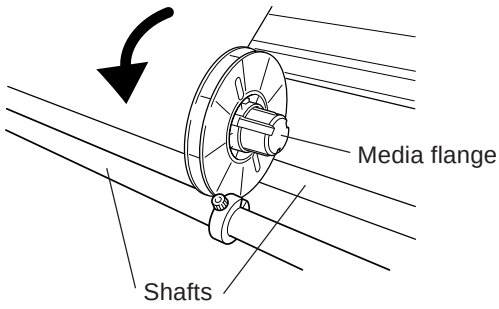

9 With the media pulled out from the roll stretched taut with no slack, move the loading lever toward "LOAD".

Pinch rollers lower to hold the media in place.

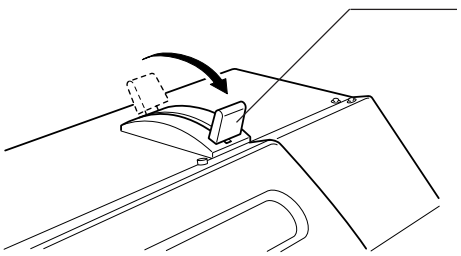

To secure the media in place, move all the way to "LOAD". When moved partway, only the left-hand pinch roller descends. Data cannot be output while in this state.

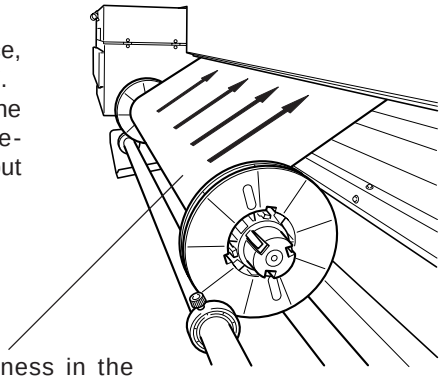

If there is slackness in the loaded media, the media may move at an angle and come loose from the pinch rollers.

10 Close the front cover.

Use the [►] and [◄] keys to select [ROLL], then press the [ENTER] key.

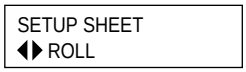

Point

If cutting is to be performed from the edge of the media, select [EDGE] (If [EDGE] does not appear, set [EDGE SENSE] to [ENABLE]).

11 Press the [SETUP] key.

This detects the width of the media and displays the printable width.

The SETUP LED lights up

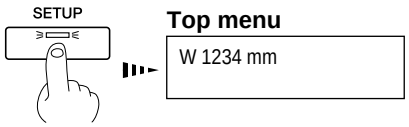

If a pinch roller is positioned over an area where is no grit roller, the message shown at below appears when you press the [SETUP] key. Check the positioning of the pinch rollers and make sure they are aligned at the correct positions.

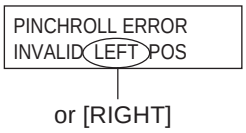

Notice

When the machine will remain unused for an extended period, remove roll media from the machine and store it.
If roll media is left mounted on the machine for an extended period, these entire roll may warp, resulting in poor printed image quality or motor errors.

Loading Sheet Media

Before attempting to load sheet media, check the following points.

Front View

Align the front edge of the media with the location shown in the figure.

Front

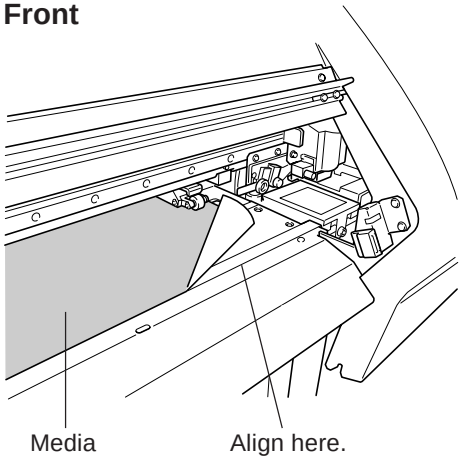

Rear View

Remove the shafts and roll media at the back of the unit.

Displaying Menu

Use the [►] and [◄] keys to select [PIECE], then press the [ENTER] key.

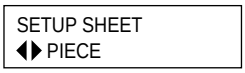

When Loading Thick Media (Only When Printing)

Media that is thick or that warps easily may lead to problems with media feed or jamming. When you are using such media, adjust the height of the print heads. You adjust the height of the print heads only when performing printing.

Point

When the height of the print head has been adjusted, it is necessary to perform bidirectional correction. For more information about bidirectional correction, refer to "4-5 Making Corrections for Printing" and see "Bidirectional Correction."

For more information about the thicknesses of media that you can load, see "8-1 Media Conditions."

Adjusting the Head Height

The head height is setting at position 2 (middle) when shipped from the factory.

1 Open the front cover.

2 Press the [MENU] key, and press the [▼] key to display the screen shown in the figure.

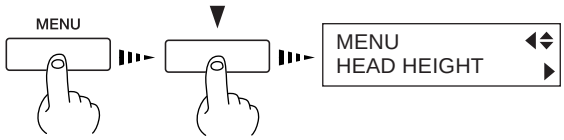

3 Press the [►] key to display the screen shown in the figure.

When the screen shown in the figure appears, the printing carriage simultaneously moves to the left.

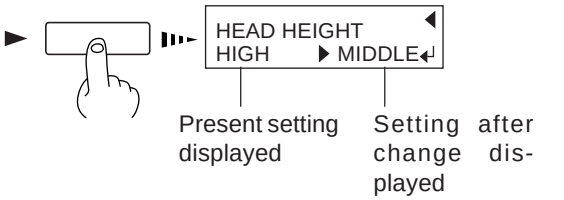

4 Move the lever to adjust the height of the head.

When you move the lever, the machine beeps and the screen display changes.

- Position 1 (low): One beep
- Position 2 (middle): Two beeps
- Position 3 (high): Three beeps

Point

Move the lever until it stops. If it is not at position 1, position 2 or position 3, bidirectional printing may be misaligned.

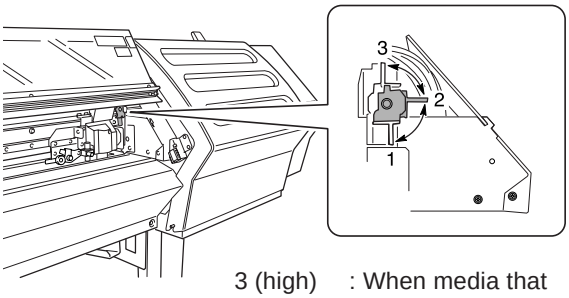

3 (high) : When media that is thick or prone to warping is loaded

2 (middle) : Standard

1 (low) : Suitable for high image quality

5 Close the front cover.

The printing carriage return to the standby position.

When Loading Media That Warps Easily (Only When Printing)

When you are loading media whose left and right edges are prone to warping, use the media clamps. The media clamps can be used to secure media that is up to 0.7 mm (0.027 in.) or so in thickness.

Notice

The following media cannot be used even when secured in place by the media clamps.
- Media whose warping is not corrected by securing it in place
- Media that deforms the media clamps when it is secured in place
- Media that is prone to warping and that has a thickness of 0.7 to 1 mm (0.027 to 0.039 in.)
- Media with a strong tendency to curl

Attempting to force such media to be loaded may result in malfunction.

Do not use the media clamps during cutting. Doing so may damage the equipment.

Do not use the media clamps when performing printing with the height of the print heads set at position 1. The media clamps may scrape the print heads.

Securing in Place Using the Media Clamps

1 Position the print heads at 2 (middle) or 3 (high).

2 With your finger, lightly press down on each media clamp at the location shown in the figure to move it and make it grip the media.

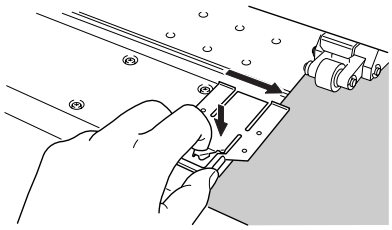

3 Line up the holes in the media clamps with the left and right edges of the media.

Point

Set the media clamps at the correct locations. If they are not set at the correct locations, the media may catch or cause other problems.

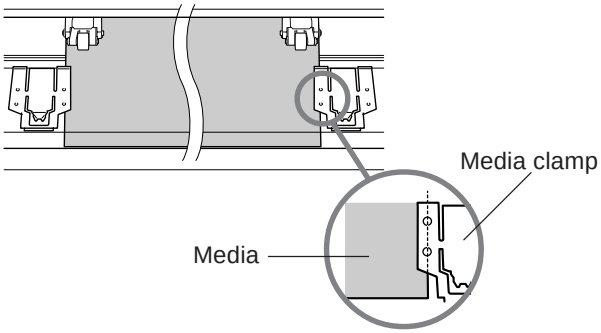

Notice

When you cut off media while using the media clamps, then depending on the media, it may come loose from the media clamps. After you cut off the media, check to make sure that the media has not come loose from the media clamps.

As printing proceeds, the media may move to the left right and touch or come loose from the media clamps. After about 1 m (3 ft.) of media has been fed, check the positioning of the media clamps. If the media looks like it may come loose from the media clamps, adjust the positioning of the media clamps.

The media clamps are designed to press down on a space 10 mm (7/16 in.) inward from either edge of the media. Do not perform printing within these areas.

Separating the Media

Make sure the [SETUP] LED lights up.
To cut off a printed portion from the roll, hold down the [SHEET CUT] key for at least one second. The piece is cut off at the present location of the printing-start line. This step is not necessary when cutoff is performed automatically by sending a media-cutoff command from the computer.

Point

Depending on the composition of the media, cutoff may not be possible.

Depending on the composition of the media, media may remain on the platen after cutoff. If this happens, remove it by hand.

When you're performing cutoff, do not use the [▲] key to pull the media back. Unless the end of the media has been pulled out to a location to the front of the platen, cutoff may not be performed smoothly.

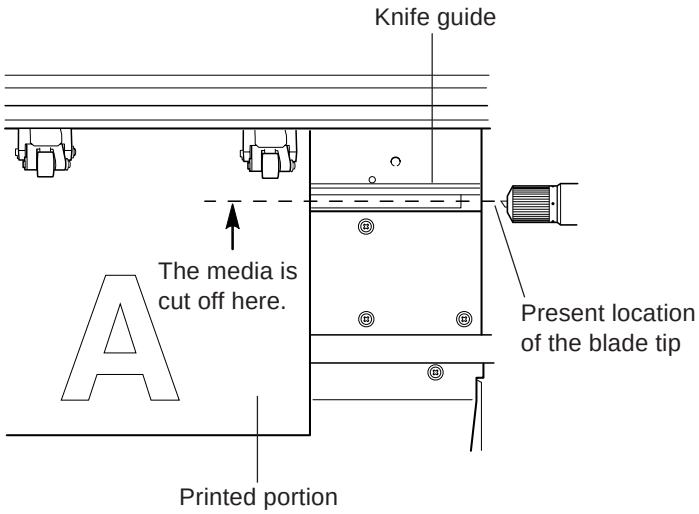

Removing the Media

1. Refer to the previous section, "Separating the Media," and cut off the media.

2. When the SETUP LED is lighted, hold down the [SETUP] key for at least one second.

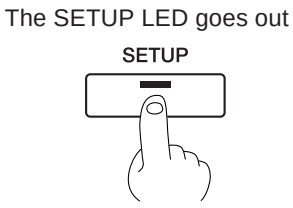

3. Move the loading lever toward the back of the unit.

   The pinch rollers rise to release the media.

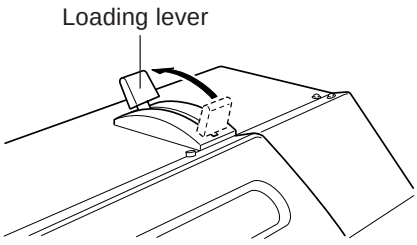

4. Remove the media.

2-4 Printing

Notice

Do not open the front cover. Opening the front cover while printing is in progress causes an emergency stop. This means that printing may not be carried out correctly even if operation is resumed, due to drop-out or misalignment of the image.

During printing, do not touch the portion of the media that's already been discharged.
Doing so may obstruct media feed or cause the media to rub against the heads, which may result in a paper jam or damage to the heads.

The print heads may be left uncapped (that is, the print head carriage may remain over the platen). If the machine is allow to stand to with the print heads uncapped for a prolonged period, the print heads may become irreversibly clogged.
If the print head carriage stops while over the platen, press the [POWER] key to reset the power. The print head carriage moves and the print heads are capped.
If the print head carriage does not move even when you reset the power using the [POWER] key, refer to "7-1 What to Do If" and see "What to Do When the Print Head Carriage Does Not Move."

To Perform Printing

Before performing a printing test or starting printing, make sure the following two points have been carried out.

- Media is loaded and the front cover is closed.
- The SETUP LED is illuminated.

Pressing the [SETUP] key detects the width of the media and displays the printable width.

Point

How to Load Media

For information on how to load media, refer to "2-3 Loading Media."

The [SETUP] Key

Pressing this for one second or longer clears the media setup.
If another menu screen is displayed, the media setup is not cleared simply by pressing the [SETUP] key.

Performing a Printing Test

Before starting to print, carry out a printing test to check the state of the head.
Problems such as missing dots may reduce the printing quality.
If the test results show a problem, carry out head cleaning to restore the head to its normal state.

1 Press and hold the [TEST PRINT] key for at least one second to carry out a printing test.

The test pattern is printed.

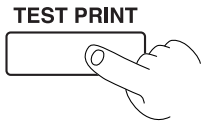

2 If dot drop-out is present, clean the heads.

For more information about head cleaning, see "5-1 Cleaning the Print heads."

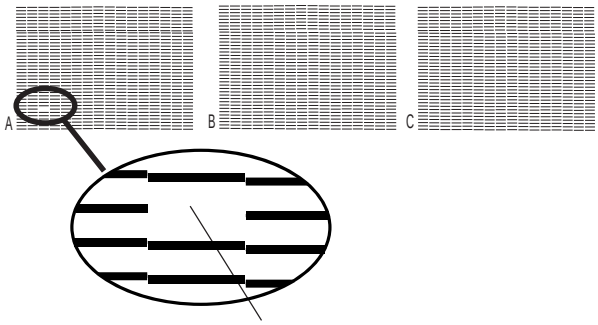

Downloading Printing Data

Printing is started when data is sent.

If the top menu isn't displayed, printing doesn't start even when data is sent from the computer. If another menu screen is displayed, press the [SETUP] key, and display the top menu.

Point

Conditions for starting printing

- The media must be already set up (with the SETUP LED lighted).
- The display must show the top menu.

Top menu

W 1234 mm

2-5 Cutting

Notice

Do not open the front cover. Opening the front cover while cutting is in progress causes an emergency stop. This means that printing may not be carried out correctly even if operation is resumed, due to drop-out or misalignment of the image.

Do not use the media clamps during cutting.

To Perform Cutting

If you're using roll media, then before you start cutting, leave media hanging freely at the rear. Turn the media flanges by hand to pull out the necessary length from the roll. If cutting is started without doing this first, a motor error may occur or the roll may fall because the media is pulled with excessive force.

Also, before performing a cutting test or starting cutting, make sure the following two points have been carried out.

- Media is loaded, a blade is installed, and the front cover is closed.
- The SETUP LED is illuminated.

Pressing the [SETUP] key detects the width of the media and displays the printable width.

Point

How to Load Media

For information on how to load media, refer to "2-3 Loading Media."

The [SETUP] Key

Pressing this for one second or longer clears the media setup.
If another menu screen is displayed, the media setup is not cleared simply by pressing the [SETUP] key.

Test Cutting

Cutting quality is affected by the blade and media being used, and by the cutting conditions. There are four cutting conditions: "cutting speed", "blade force", "blade offset", and "amount of blade extension". For high-quality cutting, it is necessary to set the appropriate cutting conditions for the blade and media in actual use.
The cutting test is a feature for checking beforehand whether these cutting conditions are appropriate.

1 Install a blade and load a media, then close the front cover.
Make sure the [SETUP] LED lights up.

2 Use the [▲], [▼], [►] and [◄] keys to move the tool carriage to the place where the test cutting is to be performed.

3 Press the [TEST CUT] key for 1 second or longer.
Test cutting starts.

4 Examine the cutting results for the media and diagnose the cutting conditions.

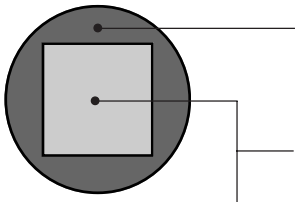

(1) Peel off the round section (marked by ■).
When it can be peeled by itself, without disturbing the square (marked by ■), the cutter force is set appropriately.
If it peels, either the "blade force" or the "amount of blade extension" is insufficient.

(2) Remove the square section (marked by ■).
The optimum blade pressure is correct if you can clearly make out the lines left by the blade.
If the blade trace is indistinct or too strong, you need to adjust the "blade force" or the "amount of blade extension".

(3) Check the shape of the rectangle.
- If the corners are cut securely as shown in A, there conditions are correct.
- If the corners are rounded as shown in B, the "blade offset" is insufficient.
- If the corners have "horns" as shown in C, the "blade offset" is too large.

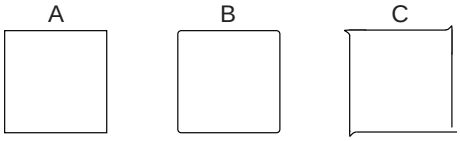

If the test cutting shows problems with the media cutting results, adjust the cutting conditions.
For "cutting speed", "blade force", and "blade offset," press the [CUT CONFIG] key and set the cutting conditions. (Refer to "6-1 Menus Flowchart")

For "amount of blade extension", refer to the following.

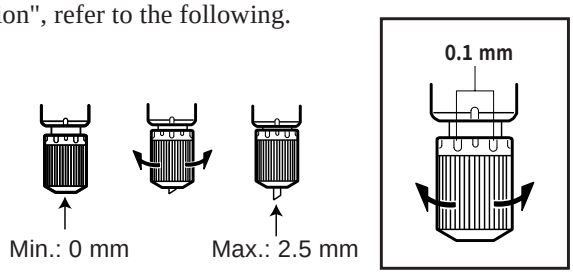

Repeat the cutting tests and adjustment of the cutting conditions until you obtain good cutting results for the media.

Incorrect cutting conditions may cause symptoms such as those described below.

Blade force

- The material is easily torn.
- The cutter requires frequency replacement.
- Cutting extends through the base paper, and normal advancing of the material becomes impossible.
- The unit suffers damage.

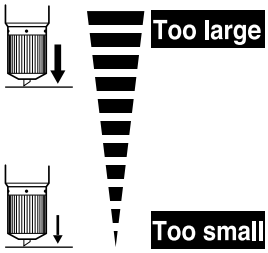

Some parts of the material remain uncut.

Blade offset

Corners flare outward, with "horns."

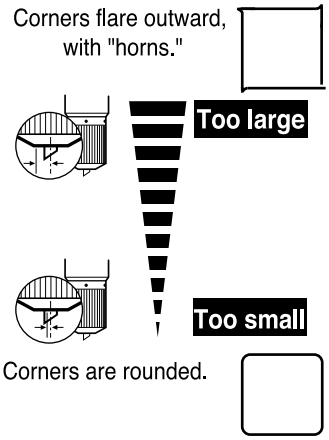

Corners are rounded.

Point

When [CUTTING PRIOR] on the machine's menu has been set to [COMMAND], the program's settings for the cutting conditions take priority.
To give priority to the cutting conditions set on the machine, turn off the program settings, or set the [CUTTING PRIOR] menu to [MENU].
For more information about the [CUTTING PRIOR] menu, see the section "6-2 Description of Menus".

If you are using a media with a strong adhesive layer, the adhesive layer may adhere to itself immediately when cut. This means that even though the media has actually been cut, it may appear as if it has not been cut, and blade force may mistakenly be set too high.
If a cutting test shows that the media peels easily and the blade traces on the carrier paper are optimal, then the media is being cut. Take care not to set the blade force excessively high.

Downloading Cutting Data

Cutting is started when data is sent.

If the top menu isn't displayed, cutting doesn't start even when data is sent from the computer. If another menu screen is displayed, press the [SETUP] key, and display the top menu.

Point

Conditions for starting printing

- The media and blade must be already set up (with the SETUP LED lighted).
- The display must show the top menu.

Top menu

W 1234 mm

2-6 Printing and Cutting

You can perform printing and cutting at the same time. You send the data, perform printing, and after printing has finished, you start cutting. Before you send the data, make sure a blade is installed in the cutting carriage.

Sequence of Operation for Printing and Cutting

Step 1: Perform Printing

↓

Step 2: Dry the Media

Before you start cutting, allow the media to dry sufficiently. (The drying time varies according to the type of media.) If the media is not dry enough, the pinch rollers or the blade may smudge the printed surface during cutting.
Setting the drying time on the RIP you're using lets you start cutting after waiting for a fixed interval. For information on how to make the setting, refer to the documentation for the RIP you're using.

↓

Step 3: Perform Cutting

Do not use the media clamps when cutting.

When you perform printing followed by cutting, the end of the cap for the blade holder may rub against and damage the printed surface. (Damage is even more likely when drying is insufficient.)
If this happens, increase the amount of extension of the blade tip slightly.

If the media is not dry enough, using the middle pinch roller may smudge the printed surface. For more information about the usage of the middle pinch roller, see "2-3 Loading Media."

2-7 Reloading the Media and Performing Cutting

When you are performing printing, then performing lamination or the like, reloading the media, and performing cutting, using the alignment function makes it possible to align the printing and cutting positions.
Alignment of the printing and cutting positions uses crop marks. Printing with crop marks added enables automatic detection of the crop marks during cutting, thereby making alignment possible.

Printing Area

When you print with crop marks, the area that you can print or cut is reduced by an amount corresponding to the size of the crop marks.
You can easily check the actual size of the area where output is possible without crop marks. While the display shows the area where output is possible, press and hold the [ENTER] key. The actual size where output is possible is displayed until you release the key.

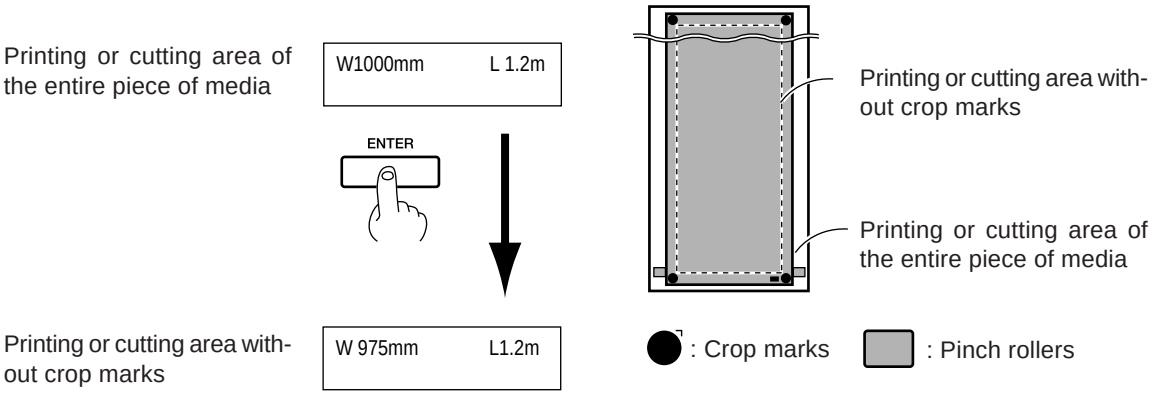

Point

When you're printing with crop marks, attempting printing that exceeds the size of the area where output is possible or that conversely is too small (40 mm (1-5/8 in.) [scanning direction] X 15 mm (5/8 in.) [feed direction]) results in the message shown in the figure, and operation pauses.
To quit printing, stop sending data from the computer and press the [SETUP] key. Pressing the [ENTER] key starts printing, but the portion that exceeds the size where output is possible is truncated and crop marks are not printed.

CAN'T PRINT CROP
CONTINUE? ↵

Media Sizes Allowing Automatic Crop-mark Detection

When you are printing with crop marks, set a margin of at least 90 mm (3-9/16 in.) before the next print-start position. You can set the margin value with the RIP you're using. For information on how to make the setting, refer to the documentation for the RIP you're using.

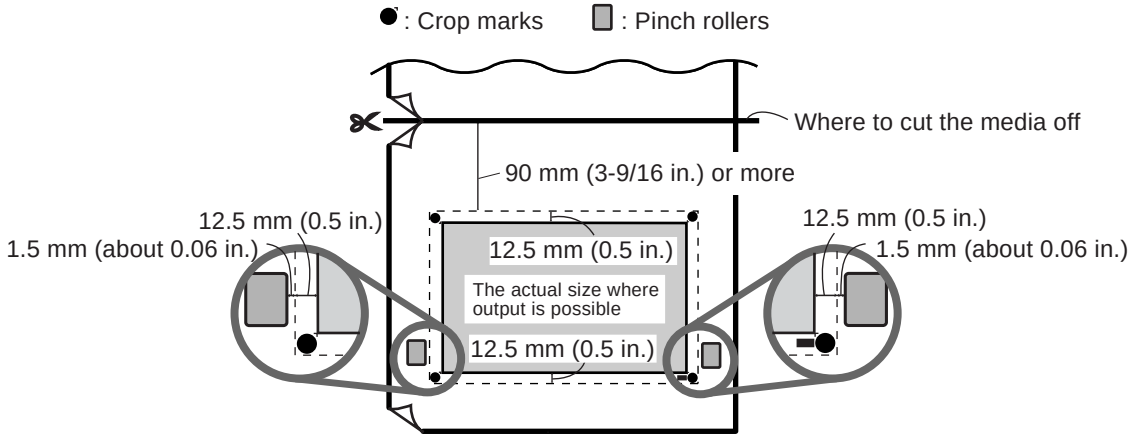

Printing with Crop Marks

Load media and output the data. Crop marks are automatically printed at four places.
Use your RIP to make the setting for printing crop marks. For information on how to make the setting, refer to the documentation for the RIP you're using.
You can use BASE POINT and ALIGN POINT 1 through ALIGN POINT 3 to perform alignment automatically or manually. For information about how to make the settings, see the following section.

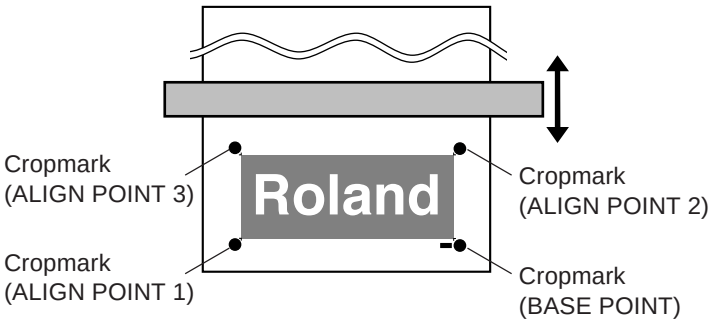

Point

Crop marks and the like drawn with computer programs cannot be used as crop marks by this machine.

Aligning Automatically

Read the four crop marks and perform alignment for printing and cutting.

1 Reload the media.
Press the [SETUP] key to display the top screen.

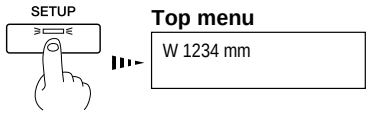

Point

Alignment cannot be performed if the line connecting the left and right crop marks is slanted by 5 degrees or more. Adjust the positioning of the loaded media.

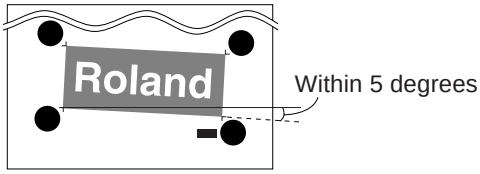

2 Move the center of the blade to a position over the lower-right crop mark (the base point), then press the [AUTO ALIGN] key.
The screen shown in the figure appears.

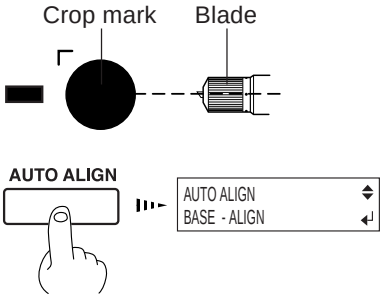

3 Use the [▲] and [▼] keys to choose [BASE ALIGN], then press the [ENTER] key.

The four crop marks are read automatically. After the reading operation has finished, a beep sounds.

4 Send the cutting data.

Cutting starts.

Point

If Automatic Alignment Cannot Be Performed

If the machine fails to detect the crop marks, the screen shown at right appears and operation stops.
If this happens, take action as follows.

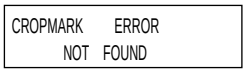

(a) The media is slanted at too great an angle, or its loaded location is misaligned. Try redoing steps 1 and 2 described "Aligning Automatically."
(b) The media is not suitable for automatic crop-mark detection. If this is the case, then perform alignment manually. For more information, refer to the next section, "Aligning Manually."

When you're using lengthy media, after every three meters of media feed the screen shown at right appears and operation pauses.

- To continue with detection : Press the [PAUSE] key.
- To quit : Press the [ENTER] key.

The effects of media warping or the like may make sensing of crop marks impossible. If this is the case, then perform alignment manually. For more information, refer to the next section, "Aligning Manually."
Lengthy media in particular is prone to large error due to warping and the like, making it unsuited to cutting alignment. We recommend dividing such media into segments that are as short as possible, then performing output separately for each segment. If the crop marks cannot be read because of the effects of media warping or the like, then perform alignment manually.

To Stop Detection

To stop crop-mark detection while in progress, follow the steps below.

1. Press the [PAUSE] key. The screen shown in the figure appears.
2. Press the [ENTER] key.

Aligning Manually

Depending on the type of media, it may not be possible to detect crop marks automatically. When crop marks cannot be detected automatically, you perform alignment manually.

1 Set the location of the origin point. Use [▲], [▼], [◄], and [►] to move the center of the blade to above the lower-right crop mark.

Use the [TOOL UP/DOWN] key to move the blade up and down and make sure it is positioned correctly.

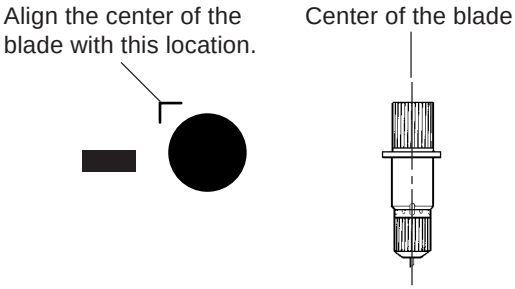

2 Press the [BASE POINT] key.

The location where the BASE POINT is set is displayed.

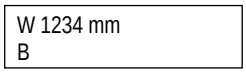

3 Use the [▲], [▼], [◄], and [►] keys to align the center of the blade with any of the align points (ALIGN POINT 1 through ALIGN POINT 3), then press the [ALIGN POINT] key.

The location where the ALIGN POINT is set is displayed. You can also set more than one ALIGN POINT.

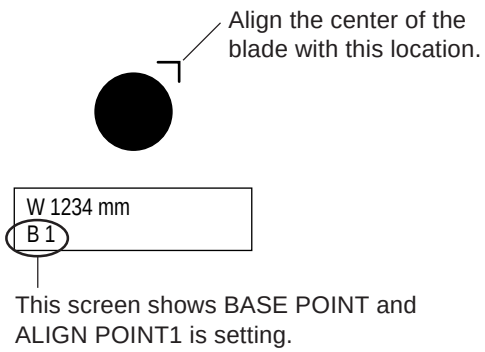

Point

You can set up to three align points. Change the number of points set with [ALIGN POINT] as required.

The locations on the media of ALIGN POINT 1 through ALIGN POINT 3 are fixed. The machine automatically determines from the location of the BASE POINT which ALIGN POINT or points have been set. The screen display the number of each ALIGN POINT that has been set. For information about the location of ALIGN POINTS, see the previous section, "Printing with Crop Marks."

Set the align points after you set the BASE POINT. Setting the BASE POINT after setting ALIGN POINTS clears all the previously set ALIGN POINTS.

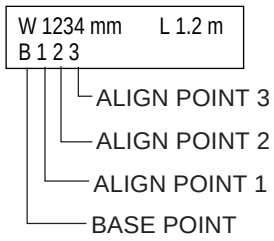

Chapter 3: Using the Print Heater

This section describes how to print and cut while using the print heater and the like.

3-1 Switching the Print Heater On and Off

Switching On the Print Heater

1 Switch on the power switch for the print heater.

After the temperature display panel flashes for a short interval, both [SV] and [PV] light up and indicate their values.

2 The [C1] indicator lights up.

The print heater starts operating.

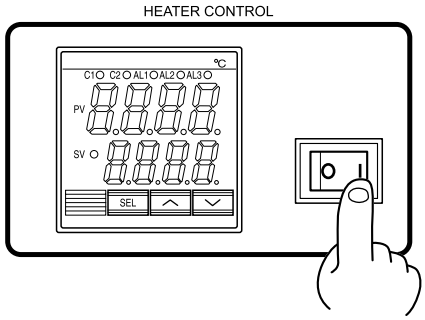

Notice

When the temperature display panel shows characters other than numerical figures, such as UUUU or LLLL, immediately switch off the print heater and contact your authorized Roland DG Corp. dealer or service center.

Point

Power Source for the Print Heater

The print heater is connected to the sub power for the printer.
The print heater operates only when both the power switch and the sub power are switched on.

Switching Off the Print Heater

Switch off the power switch for the print heater.

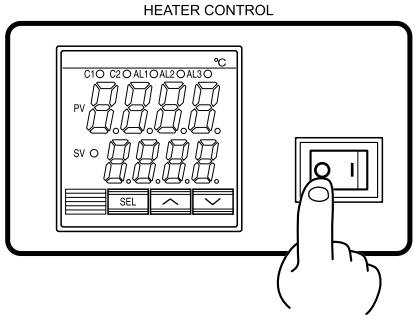

Notice

When you're not using the print heater, switch off the power to it.

Point

The preset temperature for the print heater is saved in memory even when the power is switched off.

3-2 Loading Media

About the Ambient Temperature During Print Heater Use

To ensure stable printing quality, we recommend use in an environment where the ambient temperature is 20˚C (68˚F) or higher.
At low temperatures, warm-up may take a long time, or the temperature may fail to reach the preset value, or large differences in temperature may occur. Inadequate temperature may result in coarse printing.
If the media fails to warm up sufficiently, try setting the print heater to a higher temperature. If this fails to resolve the problem, raise the temperature of the room.

Points to Observe When Loading Media

Check and observe the following points when loading media.

Use Media With a Width of about 1 m (40 in.) or More

We recommend using media having a width of about 1 m (40 in.) or more. Media of narrower width may take a long time to heat, or may fail to reach the preset temperature.
Also, in no event should media having a width of 50 cm (19-11/16 in.) or less be used. Doing so may lead to danger of overheating.

Before Loading Media, Allow the Platen to Cool Down to 30˚C (86˚F) or Lower

Before loading media, switch off the print heater or set the preset temperature to 30˚C and allow the print heater to cool down. Loading media when the print heater is 30˚C (86˚F) or more may cause the media to wrinkle or warp due to the sudden rise in temperature.

When Printing, Use the Media Clamps

Set the height of the print heads to either "Middle" or "High," then engage the media clamps. Depending on the media, the edges of the media may warp due to heat or the media may strike the print heads, causing jams or malfunction.

3-3 Printing and Cutting

Printing

Before performing printing, set the preset temperature to 40˚C (104˚F) and wait until media becomes sufficiently warm.

Notice

The recommended ambient temperature for ensuring acceptable quality when performing printing is 20 to 32˚C (68 to 89.6˚F). When the ambient temperature is less than 20˚C, the media doesn't heat up enough to ensure acceptable quality. In such cases, set the preset temperature to higher value.

1 After loading media, set [SV] to 40˚C.

It may take from few minutes to approximately 30 minutes to reach the preset temperature, depending on the ambient temperature.

2 To heat the media sufficiently, wait for five minutes after making sure that the [PV] reaches 40˚C. Then perform printing.

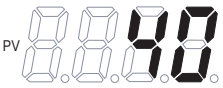

Point

The setting range of preset temperature is 30 to 50˚C (86 to 122˚F).

Performing printing as soon as the temperature reaches 40˚C may result in coarse printing because the media is not warm enough.

When the print heater reaches the preset temperature, the [C1] indicator goes dark and the print heater stops operating. The print heater is switched on and off automatically to maintain the preset temperature. Meanwhile the [C1] indicator lights up and goes dark to indicate the status of the print heater.

Cutting/Printing and Cutting

Notice

Do not use the media clamps during cutting.

Assurance of Accuracy When Performing Printing and Cutting

When the print heater is used, the media may experience subtle deformation due to thermal expansion or contraction. For this reason, no assurance is made with respect to the following points when the print heater is used.

- Distance accuracy (when cutting)
- Repetition accuracy (when cutting)
- Repetition between printing and cutting
- Alignment accuracy for printing and cutting when reloading media

Point

Using crop marks when performing printing and cutting, even when these are performed simultaneously, may help reduce misalignment. After printing, it is a good idea to allow the print heater to cool before performing cutting.

1. Carry out only printing, with crop marks.
2. Switch off the print heater, and allow the media and platen to cool sufficiently.
3. Use the crop marks to align.
4. Carry out only cutting.

For detailed information about aligning using crop marks, refer to "2-7 Reloading the Media and Performing Cutting."

To Perform Cutting Only

Before performing cutting, switch off the print heater, and allow the platen to cool sufficiently.

Chapter 4: A Wide Variety of Operations

This section describes a wide variety of operations and functions, grouped by task.

4-1 Replacing the Ink Cartridges

Care and Handling of Ink Cartridges

Notice

- Do not use anything other ECO-SOL INK cartridge. Do not attempt to refill and reuse an empty ink cartridge.
- Do not attempt to disassemble an ink cartridge.
- If an ink cartridge is dropped, the shock due to the fall may damage the ink cartridge and make it unusable.
- Store ink cartridges unopened at a temperature of -20°C (-4°F) to 40°C (104°F) in a well-ventilated location.
- Do not remove any ink cartridges except when shipping the machine.
- Do not allow a removed ink cartridge to sit out for any length of time. Doing so may result in clogging of the heads.
- If ink runs out, replace immediately with an ink cartridge designed especially for the machine.
- Do not attempt to refill and reuse an empty ink cartridge. If an ink cartridge is removed, replace it immediately with a new one.
- When removing an ink cartridge, do not rush. Detach the cartridge gently. Sudden movement when detaching may cause ink to be spilled.
- Once an ink cartridge has been installed, do not remove it until the ink has been used up. Frequent insertion and removal may allow air to enter the ink tube and result in a drop in printing quality due to dot drop-out or the like.

Replacing with New Ink Cartridges

Replacing an Ink Cartridge

Before you attempt to replace an ink cartridge, check the following two points.

- The machine is switched on.
- Operation is stopped or paused.

Notice

Removing or inserting an ink cartridge while operation is in progress may cause air to get inside the cartridge, resulting in poor image quality.

1 Remove the ink cartridge from the ink-cartridge port.

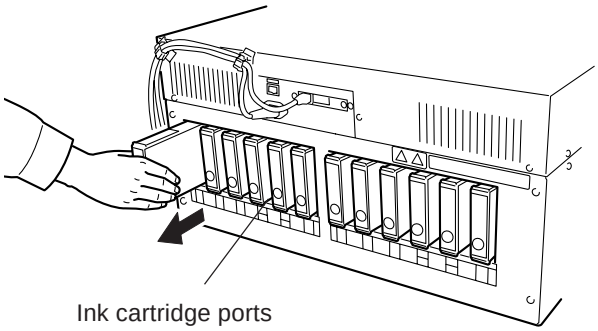

Ink cartridge ports

2 Gently shake the new cartridge.

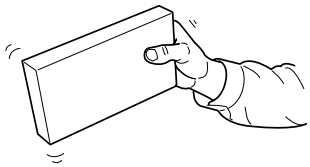

3 Insert the new ink cartridge.

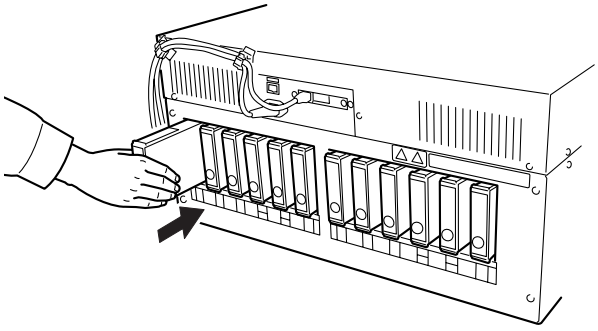

Notice

Be sure to use genuine ECO-SOL INK cartridges from Roland DG Corp. Installing other types of ink may result in breakdown or faulty operation.

If Ink Runs Out During Printing

If ink runs out during printing, a warning beep sounds and the screen shown in the figure appears.
Replace the ink cartridge. Ignoring the message and continuing printing without replacing the ink may adversely affect image quality, resulting in faintness or other problems.

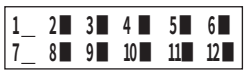

The "_" for the ink that has run out flashes.
The number indicates the number of the ink cartridge.

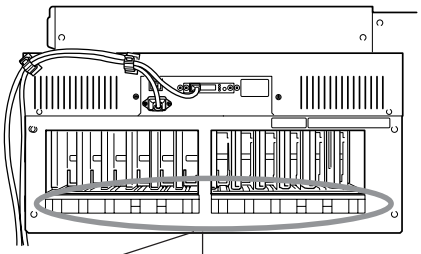

The flashed number indicate the ink cartridges at the locations shown in the figure.

Replacing Ink (When Set to the [STOP] Mode)

1. Pull out the ink cartridge indicated by the flashing number on the display.
2. Gently shake the new cartridge.
3. Insert the new ink cartridge.

Point

The behavior that occurs when it becomes necessary to replace ink while printing is in progress differs according to whether the selection for [EMPTY MODE] under [INK CONTROL] is set to [CONT.] or to [STOP]. (The default setting is [STOP].)

When Set to [STOP] (Pause)

[STOP] causes operation to pause immediately when ink needs to be replaced. Printing is resumed by replacing the cartridge. Note, however, that the colors of an image in progress may no longer match perfectly. When performing long printing, replace with sufficient ink cartridge to print.

When Set to [CONT.] (Continue Printing)

Select this when ink cannot be replaced immediately while printing in progress, such as during unattended operation at night. When the machine is set to [CONT.], an alarm sounds approximately 1 m^2 before ink runs out, but printing continues without pausing. Because printing continues with only a small amount or remaining ink, the printed ink may be faint. As a general guide, about 1 m^2 of printing is possible with the remaining ink, but the amount of ink used varies greatly depending on the image. Printing can be continued only for the data for which printing is currently in progress. The machine stops when it finishes outputting one image.

4-2 Checking the Remaining Ink Level

You can use [INK REMAINING] on the menu to check how much ink is left after the ink cartridges have been installed. Use this information as a guide for replacing the ink cartridges.

Point

In situations such as the following, the installed ink cartridge is taken to be an unused cartridge and the default amount of remaining ink is displayed, which does not match the actual amount of ink remaining.

- When an ink cartridge is removed and reinstalled while printing is in progress
- When a partly used ink cartridge is installed

1 Press the [MENU] key, and press the [▼] key to make the following screen appear on the display.

2 Press the [►] key to make the following screen appear on the display.

You can check the amount of remaining ink for ink cartridges 1 through 8.

3 Continuing by pressing the [▼] key lets you check the amount of remaining ink for ink cartridges 9 through 12.

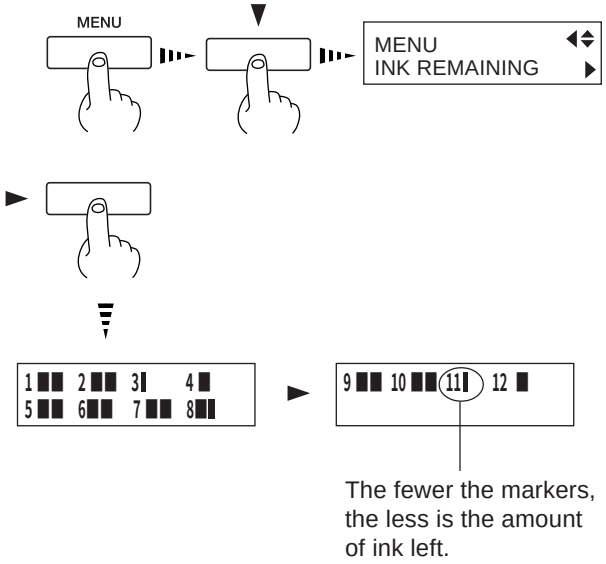

<Remaining ink > **Much**

Little

4-3 Setting the Location Where Printing Starts

Setting the Start Location

Set the location where printing or cutting starts at the desired place.

[▲], [▼], [►], and [◄] keys and the [BASE POINT] key to set the start points (origin points) for the feed direction (the direction of forward and backward movement) and the scan direction (the direction of movement of the print-head carriage).

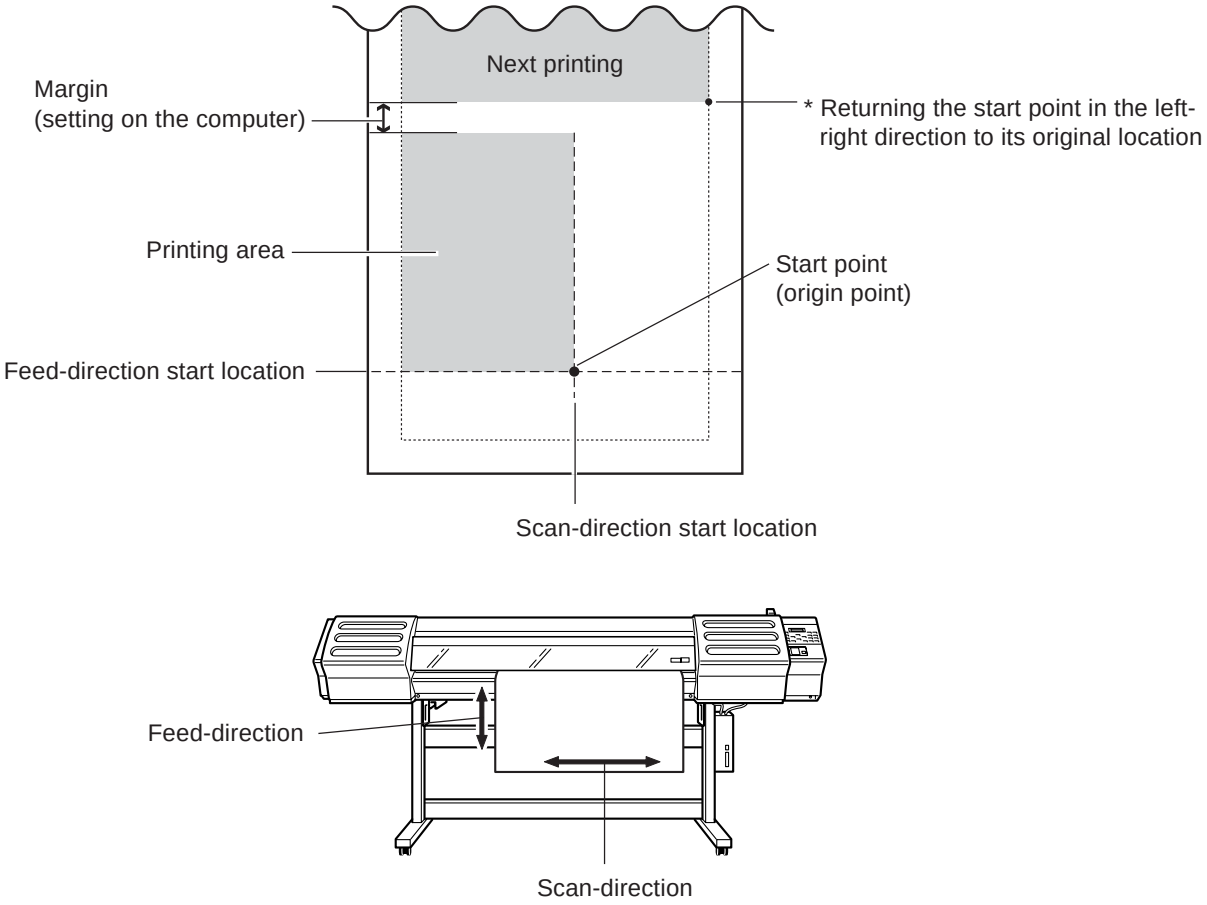

Point

When using [BASE POINT] key to change the print-start location, check the size of the data to print before you set the start position.

Setting the Start Location

1 Load media and install a blade, then press the [SETUP] key.

2 Use the arrow keys to align the blade with the new printing or cutting start location.

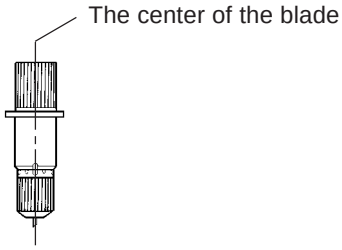

3 Press the [BASE POINT] key.
The display in the figure appears.

The BASE POINT LED lights up

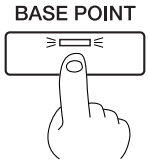

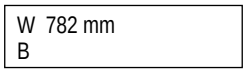

Notice

When printing, do not use the [▲] key as much as possible to pulling back the media. Otherwise the following may occur.
- The pinch rollers may pass over the printed surface and smudge the ink.
- The grit rollers may leave tracks on the media, reducing printing accuracy.
- Printing may sag.

Point

When the Start Location Is Specified Using [▲] and [▼] Keys

When the operation is performed using only the [▲] and [▼] keys, the cutting carriage comes to a stop inside the cover. Pressing the [BASE POINT] key while in this state sets just the start position for the feed direction (the direction of front-to-back movement). For the scanning direction (the direction of carriage movement), the setting is made at the edge of the printing area.

To release the setting

The position setting by [BASE POINT] key is released such as the following.

- When printing, cutting, or printing and cutting for one page finish
- Press the [SETUP] key to cancel the setup for the media

4-4 Setting the Margins

Setting the Margins in the Feed Direction

You can set the margins in the feed direction using the software RIP (raster image processor). For information about how to make the settings for the margins, refer to the documentation for the RIP you're using.

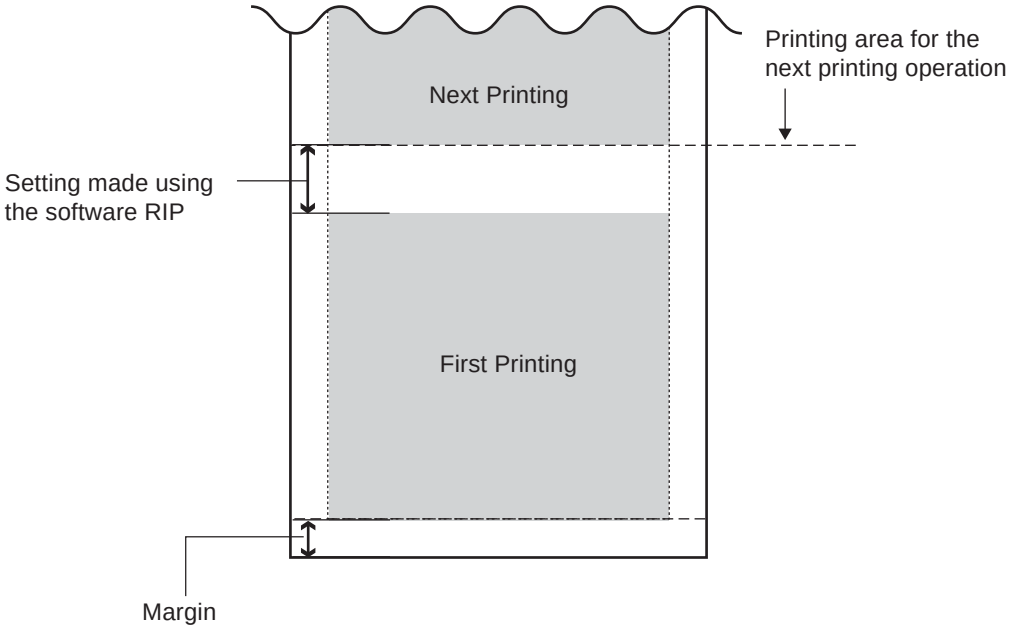

Point

When a media-cutoff command is sent from the computer during continuous output, the value for the margin between the first printing and the next printing differs. For more information about margins, see "8-3 The Media-cutoff Location During Continuous Printing."

4-5 Making Corrections for Printing

Feed Correction

This corrects for errors in the amount of feed of the grit rollers due the type of media. Be sure to make this setting when you have replaced the media with a different type. Correcting the amount of feed improves the dot-positioning accuracy in the feed direction, which can help enhance image quality.

Point

When correcting the amount of feed, set the same conditions for the type of media used and the configuration of the media (roll media or sheet media) as when actually performing printing.

When performing printing test for feed correction, load the media correctly (see "2-3 Loading Media"). If the media is not loaded correctly, an accurate correction value may not be output.

When you can set the error for the amount of feed for the grit rollers on the computer, the computer's setting takes priority. To make the machine's setting take priority, turn off the computer's setting.

Feed Correction

1 Press the [MENU] key, and press the [▼] key to make the following screen appear on the display.

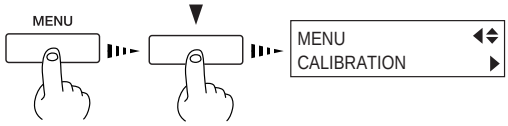

2 Press the [►] key to make the following screen appear on the display.

3 Press the [►] key to make the following screen appear on the display.

4 Press the [ENTER] key to start printing a test pattern.

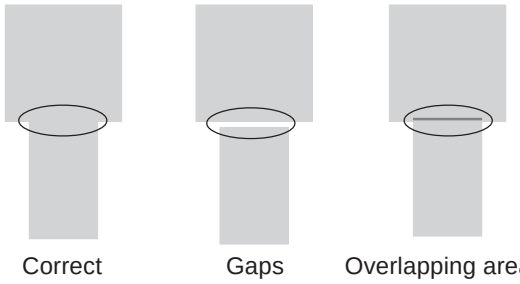

5 Press the [▼] key to make the following screen appear on the display.

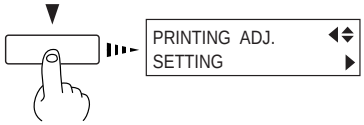

6 Press the [►] key to make the following screen appear on the display.

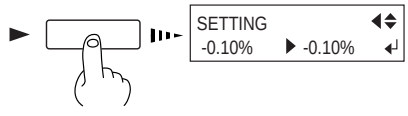

7 Use the [▲] and [▼] keys to set the value, then press the [ENTER] key.

Perform correction to ensure uniform dot spacing: If there are gaps in the test pattern, reduce the value. If there are overlapping areas in the test pattern, increase the value.

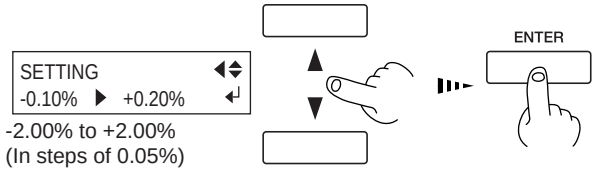

-2.00% to +2.00%
(In steps of 0.05%)

Bidirectional Correction

This adjusts for misalignment that occurs during bidirectional printing. Perform adjustment for bidirectional correction in situations such as the following.

- When media is replaced with a different type
- When the head height has been adjusted
- When using in a location subject to large changes in temperature

Point

Bidirectional correction is enabled only when performing bidirectional printing.

Setting Adjustment Value

1 Press the [MENU] key, and press the [▼] key to make the following screen appear on the display.

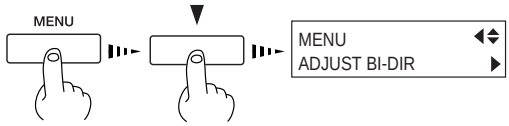

2 Press the [►] key to make the following screen appear on the display.

3 Press the [ENTER] key to start printing a test pattern.

After the printing test has finished, the media is fed to a position that lets you to view the test pattern.

4 Check the test pattern and choose adjustment value (a value with no displacement).

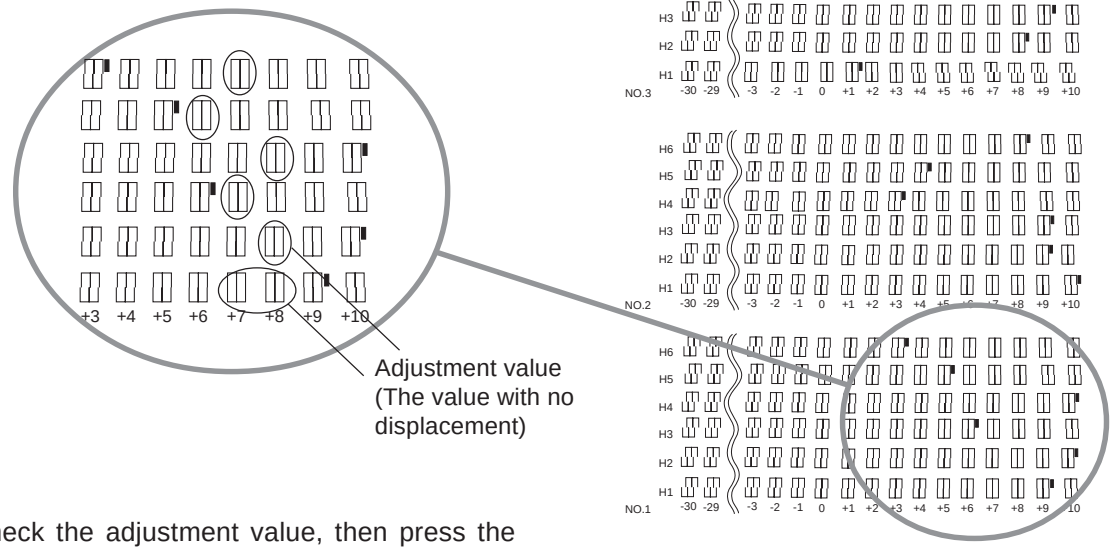

5 Check the adjustment value, then press the [ENTER] key.

The media returns to its position when the printing test ended.

6 Press the [▼] key to make the following screen appear on the display.

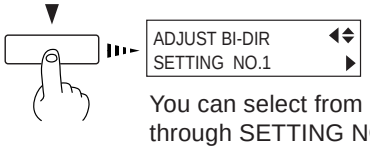

You can select from SETTING NO. 1 through SETTING NO. 4.

7 Press the [►] key to make the following screen appear on the display.

8 Use the [◄], [►], [▲] and [▼] keys to set the value you checked in step 4, then press the [ENTER] key.

In case of [SETTING NO.1], enter H1=71/2, H2=8, H3=7, H4=8, H5=6, and H6=7.

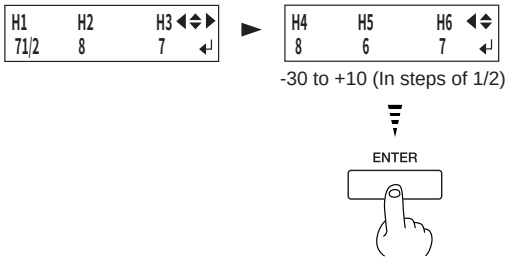

9 Use the [▲] and [▼] keys to Choose "Setting No.2." [SETTING NO. 2] appears. In the same way as in step 6 and step 8, enter the value you checked in step 4, then press the [ENTER] key.

Enter values in the same way for [SETTING NO. 3] and [SETTING NO. 4].

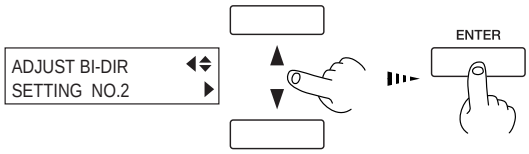

Saving and Loading a Bidirectional-correction Value

You can take adjustment values for bidirectional correction that you've set and save them in memory. You can save up to eight types. Saving different adjustment values for different types of media lets you load the adjustment value simply and easily when you change the media type.

Saving an Adjustment Value

1 Follow the steps in the previous section, "Setting Adjustment Value," to enter adjustment values.

2 Press the [▼] key to make the following screen appear on the display.

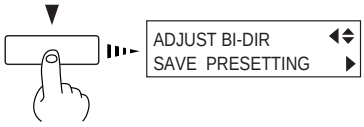

3 Press the [►] key to display the screen shown in the figure. Choose a number to save to from among [PRESETTING 1] through [PRESETTING 8], then press the [ENTER] key.

The adjustment values are saved in the memory number you selected.

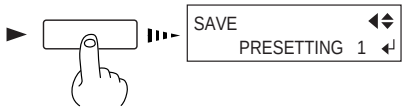

Point

It may be a good idea to keep notes of the memory numbers and the kind of media whose adjustment value is saved in each number.

Loading an Adjustment Value

1 Press the [MENU] key, and press the [▼] key to make the following screen appear on the display.

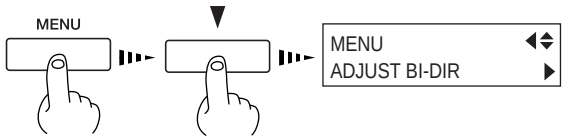

2 Press the [►] key to make the following screen appear on the display.

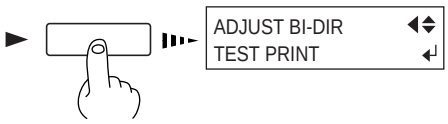

3 Press the [▼] key to make the following screen appear on the display.

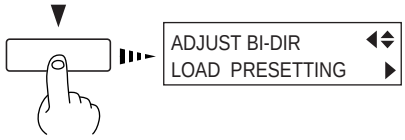

4 Press the [►] key to display the screen shown in the figure.

Choose the memory number to load, then press the [ENTER] key.

The selected adjustment value is loaded.

Point

This operation deletes adjustment values that are not saved in memory. If there are adjustment values that you want to keep, save them in memory first.

Environment Matching

If the machine's setting environment (temperature and humidity) changes, run the [ENV. MATCH] menu item to automatically adjust the machine to a state optimized to the environment where it is installed.
For more information about environment-matching procedures, refer to "1-5 Switching On the Power for the First Time" and see "Step 2: Match the Machine to the Environment Where Installed."

4-6 Making Corrections for Printing and Cutting

When printing is followed by cutting, the cutting line may be displaced from the printing margin. If this happens, use the [PRINT-CUT ADJ.] function on the menu to align the start points for printing and for cutting.

Point

Before you run [PRINT - CUT ADJ.], run [ENV. MATCH]. For more information about how to adjust this, refer to "1-5 Switching On the Power for the First Time" and see "Step 2: Match the Machine to the Environment Where Installed."

Adjusting Automatically

1 Load some media and press the [SETUP] key.

The SETUP LED lights up

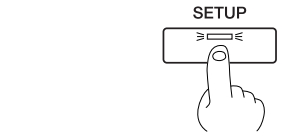

2 Press the [MENU] key, and press the [▼] key to make the following screen appear on the display.

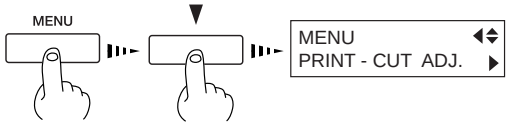

3 Press the [►] key to make the following screen appear on the display.

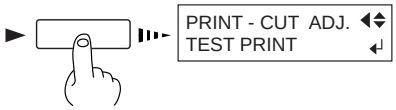

4 Press the [▲] key to make the following screen appear on the display.

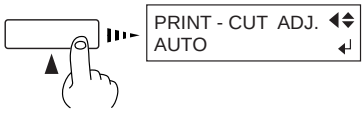

5 Press the [ENTER] key to print crop marks and read the square mark automatically.

While automatic adjustment is in progress, the following message appears on the display.

NOW PROCESSING...

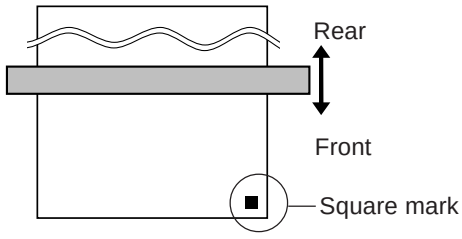

6 When the following message appears, automatic adjustment is finished.

PRINT-CUT ADJ.
COMPLETED!!

Point

Depending on the type of media, it may not be possible to perform correction automatically. If this happens, read in the offset value from a test pattern and align the positions for printing and cutting. For information on how to read an offset value from a test pattern, see the next section, "Adjusting Manually."

Adjusting Manually

Read the correction value from the test pattern printed and cut on the media. Enter the read correction value with the operation panel, then align the printing and cutting positions.

1 Load media and install a blade, then press the [SETUP] key.

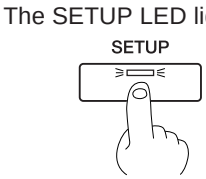

2 Press the [MENU] key, and press the [▼] key to make the following screen appear on the display.

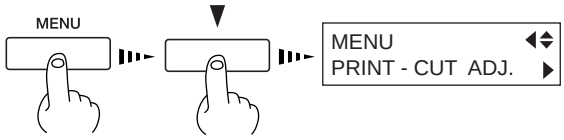

3 Press the [►] key to make the following screen appear on the display.

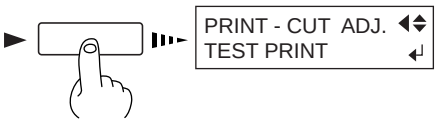

4 Press the [ENTER] key to print and cut the test pattern.

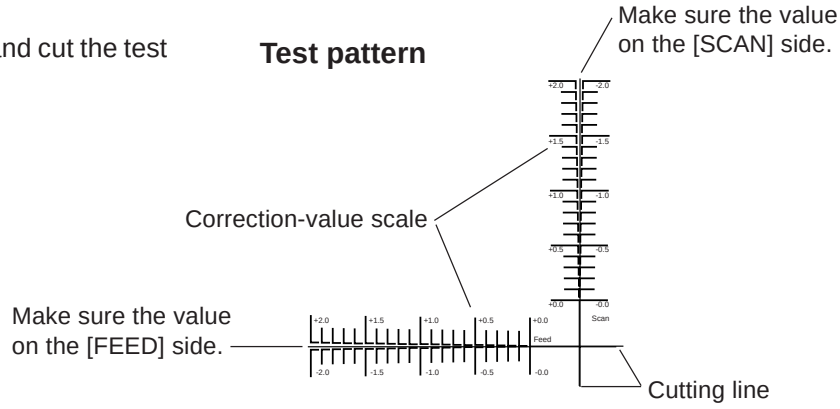

5 From the test pattern, read the value at the location shown in the figure.

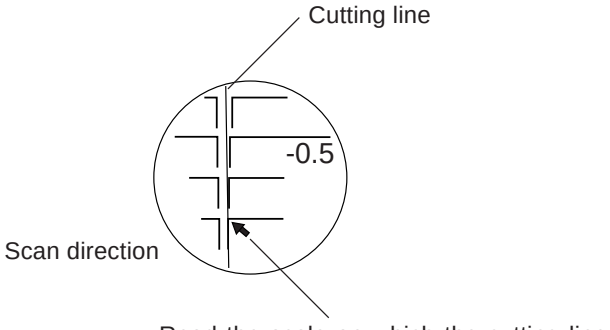

Read the scale on which the cutting line goes over as the correction-value. In this figure, the value is "-0.3." Use the same method to read the value on the [FEED] side.

6 Use the [▼] key to choose [FEED SETTING].

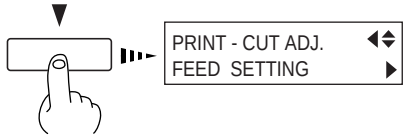

7 Press the [►] key to make the following screen appear on the display.

8 Enter the correction value read in step 5.
Select the correction value with the [▲] [▼] key, and press the [ENTER] key.

9 Repeat steps 6 through 8 and enter the correction value of [SCAN SETTING].

4-7 Stopping Printing or Cutting Operations

Stopping Printing or Cutting Operations

Stopping Printing or Cutting

1 Press the [PAUSE] key.

The PAUSE LED lights up

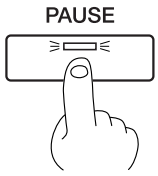

2 Halt transmission of printing instructions from the computer.

3 Hold down the [SETUP] key for one second or longer. Any remaining data is cleared.

The SETUP LED flashes

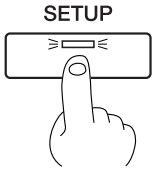

Pausing Printing or Cutting Operations

Press the [PAUSE] key. The PAUSE LED lights up.

The PAUSE LED lights up

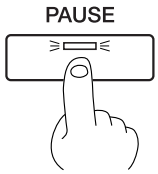

To resume printing

Press the [PAUSE] key again. The PAUSE LED goes out.

The PAUSE LED goes out

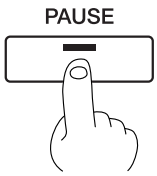

4-8 Recording the Amount of Remaining Media

Displaying the Amount of Remaining Media on the Screen

You can display how much of the media in use is left.
Once you set the amount of media remaining, the amount remaining is displayed at the top menu until it reaches zero. If you cancel the setup such as by removing the media or raising the loading lever, the amount remaining at that time flashes on the screen.
* The remaining amount that is displayed is only an estimate, and its accuracy is not assured.

Point

The amount of media remaining is not updated automatically when you change the media. Redo the setting whenever you change the media.
Note, however, that when sheet media is loaded (that is, when [SETUP SHEET] is set to [PIECE]), the amount of media remaining is set automatically.

1 Press the [MENU] key, and press the [▼] key to make the following screen appear on the display.

2 Press the [►] key to make the following screen appear on the display.

3 Press the [▼] key to make the following screen appear on the display.

4 Press the [►] key to make the following screen appear on the display.

Use the [▲] and [▼] keys to set the amount of media remaining, then press the [ENTER] key.

5 Press the [MENU] key, then the [◄] key to go back to the original menu screen.

The amount of media remaining that you set is displayed.

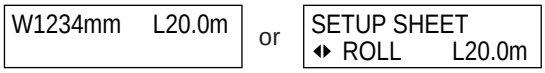

Point

You can also make this menu appear automatically when you change the media. In addition, you can print the amount of media remaining for later reference. For more information, go to "6-2 Description of Menus" and refer to "SHEET REMAIN."

4-9 When Not in Use for a Prolonged Period

When the machine is out of use for an extended period, then once a month, switch on the power and perform cleaning. When the machine's main power switch is left on, a warning beep sounds about once a month to remind you to perform cleaning. We recommend switching off only the sub power and leaving the main power on even when the machine is out of use for an extended period.

1 When the machine is out of use for about a month, a warning beep sounds and the following message appears on the display.

PRESS THE POWER
KEY TO CLEAN

2 Press the [POWER] key to switch on the sub power.

Cleaning is performed automatically.

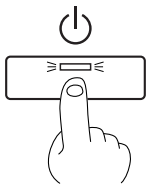

The POWER LED lights up

3 After cleaning has finished, hold down the [POWER] key for 1 second or longer to switch off the sub power.

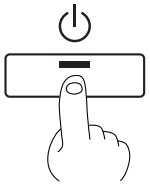

The POWER LED goes out

Notice

Even when not in use, keep the machine in an environment where the temperature is 5 to 40 ˚C (41 to 104 ˚F) and the humidity is 20 to 80 % (no condensation). In particular, be careful to make sure not to expose the machine to high temperatures of 40 ˚C (104 ˚F) or more.

This machine has features for draining internal ink and for performing washing using washing cartridges, but they should never be used except in special cases. When you're using ECO-SOL ink, allowing the machine to stand without ink for a prolonged period may damage the heads, even if internal washing is performed. Once ink has been filled, then as a rule the ink should never be drained.

Chapter 5: Maintenance

This section describes how to clean the print heads, daily care and maintenance, and the like.

5-1 Cleaning the Print heads

Switching on the sub power automatically performs maintenance operations, including cleaning of the print head. This means that there is normally no need to perform cleaning otherwise. If drop-out occurs with printed images, clean the print head.

Cleaning the Print heads

1 Load media for printing-test use.

2 Press the [CLEANING] key, and press the [▼] key to select the printing-head group to clean.

Press the [ENTER] key to start head cleaning.

Also, holding down the [CLEANING] key for at least one second starts head cleaning for all heads.

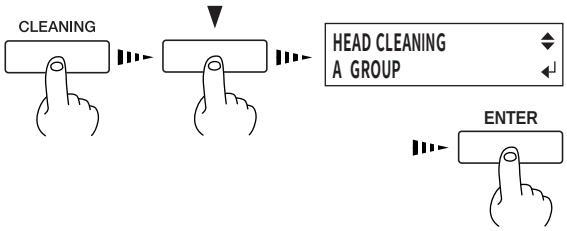

Point

Printing-head Groups

A Group : Cyan, Magenta
B Group : Yellow, Black
C Group : Light magenta, Light cyan

3 After head cleaning has ended, holding down the [TEST PRINT] key for one second or longer starts a printing test.

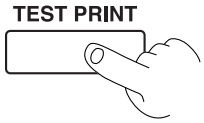

4 Refer to "2-4 Printing" and see "Performing a Printing Test" and check the printing-test results.

If a problem is found, repeat the cleaning.

If Drop-out Persists Even After Carrying Out Cleaning Several Times

Point

Perform head cleaning only when there is dot drop-out (gaps) or printing becomes faint.
Performing head cleaning more than necessary subjects the heads to wear and consumes ink. In particular, cleaning performed at the [POWERFUL] menu for [HEAD CLEANING] can cause premature head wear and consume large amounts of ink.

1 Load media for printing-test use.

2 Press the [MENU] key, and press the [▼] key to make the following screen appear on the display.

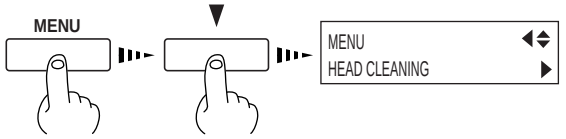

3 Press the [►] key and [▼] key to select [MEDIUM] or [POWERFUL].

You can choose to perform cleaning of only the A group heads, B group heads, or C group heads by pressing the [▼] key more times.

Press the [ENTER] key to start head cleaning.

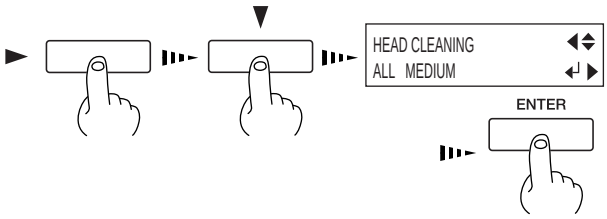

4 When head cleaning finishes, perform a printing test to check the results.

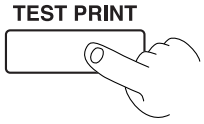

If Performing POWERFUL Cleaning Several Times Does Not Correct the Drop-out Problem

If performing cleaning several times at the [POWERFUL] menu does not correct the image drop-out problem, use the included cleaning kit. For information on how to use the cleaning kit, refer to the following section, "Cleaning Using the Cleaning Kit."

5-2 Cleaning Using the Cleaning Kit

Cleaning using the cleaning kit should be carried out when automatic cleaning and forced cleaning from the [HEAD CLEANING] menu fail to correct image drop-out. Remove any ink buildup of dust or grime around the print heads, which can cause image drop-out or ink drips. We also recommend performing periodic cleaning using the cleaning kit to prevent problems like these during printing.
If image drop-out persists even after performing cleaning with the cleaning kit, or if the cleaning kit is used up, contact your authorized Roland DG Corp. dealer or Roland DG Corp. service center.
The heads are consumable parts. The useful life is six billion shots per nozzle.

Notice

Before starting cleaning, read through this section carefully to familiarize yourself with the procedures, then carry out the cleaning operations quickly and accurately.
Cleaning is performed while the caps on the print heads are detached, so cleaning must be completed before the heads dry out. It is suggested that cleaning be completed in thirty minutes or less.
If it appears that cleaning operations may take more than thirty minutes, stop the cleaning operations and follow the steps below.

1. Attach the cover and tighten the screws.
2. Press the [ENTER] key. (Cleaning of the print heads starts.)
3. Again carry out cleaning using the cleaning kit.

Cleaning Using the Cleaning Kit

1 Switch on the main power switch on the back of the machine.

Leave media unloaded at this time.

2 While holding down the [CLEANING] key, switch on the [POWER] key.

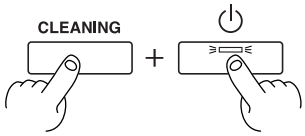

3 Press the [▲] and [▼] keys to select [CLEANING].

4 Press the [ENTER] key.

The screen shown in the figure appears, and the printhead carriage moves to the middle of the left cover.

5 Make sure the screen shown in the figure is displayed, then remove the four screws and open the left and right covers.

Notice

Take care not to drop the covers when removing them. If dropped, the impact may cause them to break.

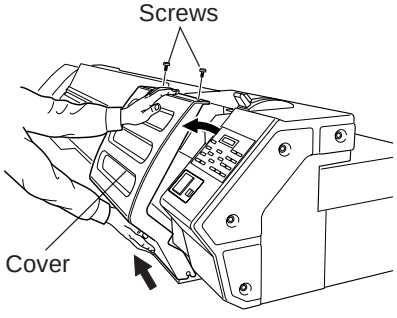

6 To discharge static electricity from your body, touch the location shown in the figure.

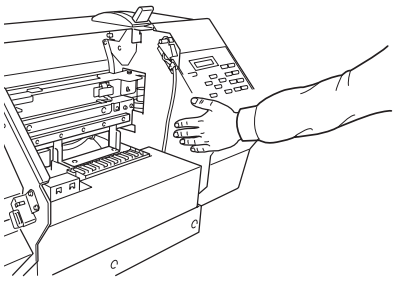

7 Clean the heads and the area around the heads on the left side of the machine. Use a cleaning stick to wipe off any grime from the stainless-steel frame for the heads and the plastic areas on either side of the heads.

> **Notice**
>
> Be sure to use one of the included cleaning sticks. Do not touch the nozzle surface of the heads.

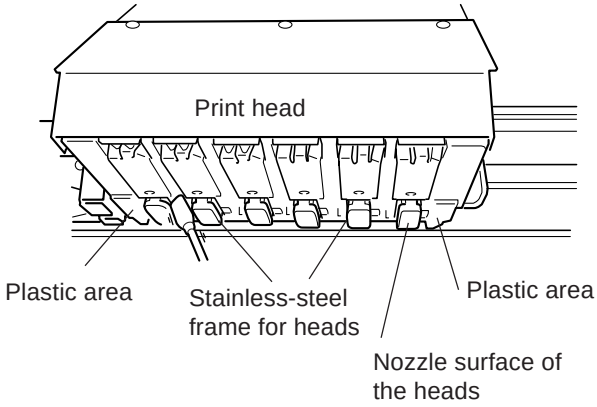

8 Clean the surface of the stainless-steel frame on the right side of the machine. Use a cleaning stick to wipe away any buildup of dust and ink from the surface of the stainless-steel frame.

If there is dust on the sponges, wipe it off with the cleaning stick.

> **Point**
>
> Give special attention to removing the fibrous dust that tends to build up on the heads.

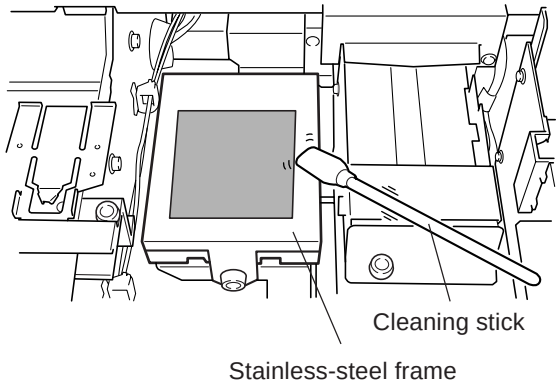

9 Clean the rubber caps and the area around them. Use a cleaning stick to wipe off any buildup of dust or grime from the rubber caps.

If there is dust on the sponges, wipe it off with the cleaning stick.

> **Notice**
>
> If no grime is present, do not touch the sponges inside the rubber caps.
>
> When removing grime adhering to the sponge inside a rubber cap, touch the sponge gently with the tip of the cleaning stick to pick up the grime. Rubbing forcefully may damage the surface of the sponge.

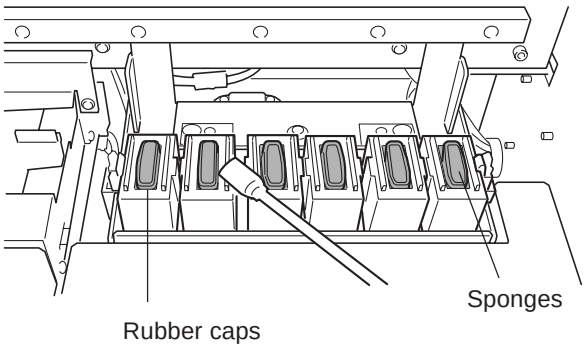

10 Clean the wiper. Use a cleaning stick to wipe away any buildup of dust and grime from the wiper.

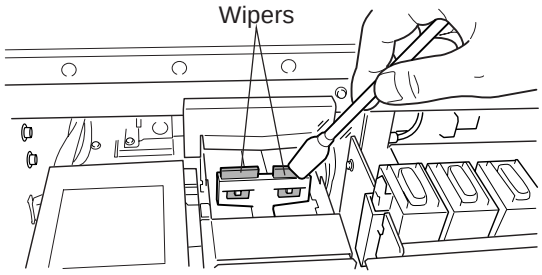

> **Point**
>
> **Replacing the Wiper**
>
> If the message [REPLACE WIPER] appears on the display, replace the wiper with a new one. As a rule of thumb, the message prompting you to replace the wiper appears when cleaning has been performed 500 times (with [ALL] selected for head cleaning). For information on how to replace the wiper, see "5-3 Replacing the Wiper."

11 Attach the left and right covers and secure them closed by tightening the screws.

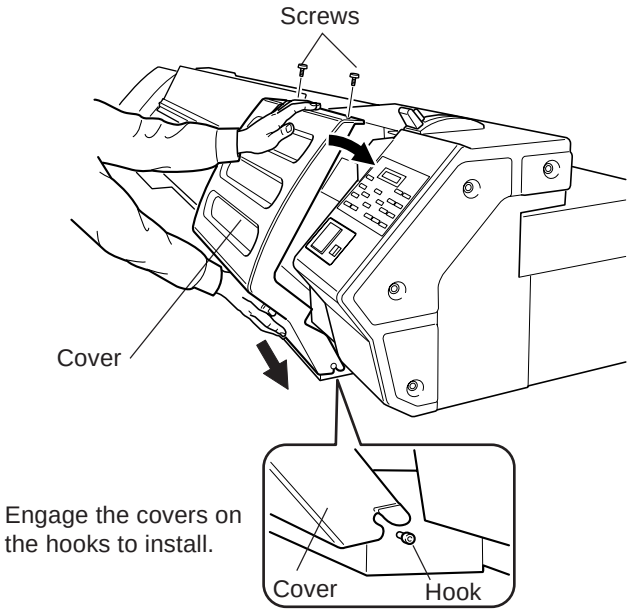

12 Press the [ENTER] key.

The screen shown in the figure appears, the print heads return to the standby position, and head cleaning starts automatically. After cleaning has finished, switch off the sub power.

13 Again press the [POWER] key to switch on the sub power.

14 Load media, and carry out a printing test.

Examine the results of the printing test and make sure that all dots are printed attractively. If necessary perform head cleaning to make the dots clean and even.

5-3 Replacing the Wiper

If the message shown in the figure appears, replace the wiper with a new part.

1 Follow steps 1 through 3 in "5-2 Cleaning Using the Cleaning Kit" to display the screen shown in the figure, and press the [ENTER] key.

2 Follow steps 5 and 6 in "5-2 Cleaning Using the Cleaning Kit" to detach the right cover, and discharge static electricity from your body.

3 Using tweezers, grasp the bottom portion of the wiper and take it off the hook.

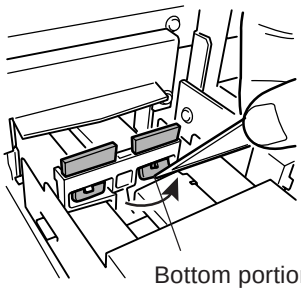

4 Remove the wiper.

> **Point**
>
> The wiper has a rubber surface and a felt surface. Attach it so that the rubber surface faces the front.

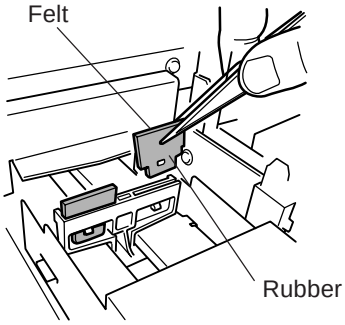

5 Install the new wiper.

Use the tweezers to press the area shown in the figure and engage the wiper on the hook.

> **Notice**
>
> When installing the wiper, be sure to engage it on the hook. If the wiper is not hooked, it may fall off during use. Use the included tweezers to install and detach the wiper.

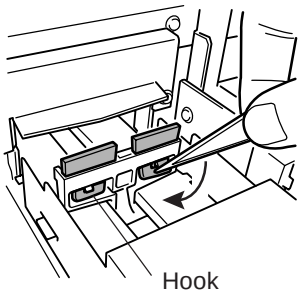

6 Follow steps 11 through 13 in "5-2 Cleaning Using the Cleaning Kit" to attach the right cover and carry out a printing test.

5-4 Other Cleaning Tasks

When cleaning the unit, be sure to wait approximately 30 minutes or more after switching off the power until the temperature of the platen falls sufficiently.
Doing so may cause burns because the platen is hot.

Never clean with solvents (such as benzine or thinners).
Doing so may cause fire.

Notice

- When carrying out any cleaning other than cleaning using cleaning sticks, switch off the main power. Before turning off the main power, press the [POWER] key to switch off the sub power.
- Never lubricate the mechanisms.
- Periodically clean the platen, grit rollers, and media clamps.
- Do not touch the print heads or allow the print heads to come in contact with anything except ink.

The machine and the inside of the front cover may become soiled with ink during printing. The cleaning methods described below let you continue printing without affecting the printed media or the machine.

Cleaning the Body

Use a cloth moistened with water then wrung well, and wipe gently to clean. Wipe the operation panel and display gently with a clean, soft cloth.

Cleaning the Platen

Moisten a cloth with neutral detergent diluted with water, wring dry, and wipe gently.
For buildup of cutting dust on the platen, use a commercially available brush to brush them away toward the front. When doing this, do not use a metal brush.

Cleaning the Grit Rollers

Use a commercially available brush to remove dust and other detritus.
Any adhering grime may prevent the media from being held in place securely.

Cleaning the Pinch Rollers

Moisten a cloth with neutral detergent diluted with water, wring dry, and wipe gently.

Cleaning the Front Cover

Use a cloth moistened with water then wrung well, and wipe gently to clean.

Cleaning the Media Clamps

If there is buildup of ink or dust, moisten a cloth with neutral detergent diluted with water, wring dry, and gently wipe the surface.

5-5 Disposing of Discharged Ink

The bottle stand for the drain bottle is provided with a window to help determine when discharged ink needs to be disposed.

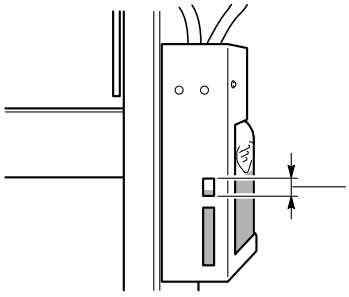

When the discharged ink is within this range, dispose of it. If discharged ink is allowed to exceed this range, it may spill when the bottle is removed.

Dispose of ink in the drain bottle as described below.

Notice

Discharged ink is flammable and contains toxic ingredients. Do not attempt to incinerate discharged ink or discard it with ordinary trash. Also, do not dispose of it in sewer systems, river, or streams. Doing so may have an adverse impact on the environment.

Procedure for Disposing of Discharged Ink

1 Press the [POWER] key at least one second to switch off the sub power.

The POWER LED goes out

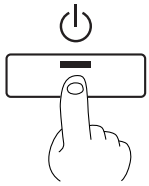

2 Remove the drain bottle.

3 Dispose of discharged ink properly, in accordance with regional laws and regulations.

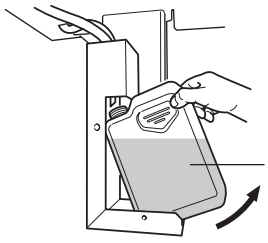

Point

If any ink gets on your hands or clothing, wash it off as soon as possible. Ink stains may become difficult to remove if allowed to stand.

5-6 How to Replace the Blade

Do not touch the tip of the blade with your fingers.
Doing so may result in injury, and the cutting performance of the blade will be impaired.

1 Press the [MENU] key, and press the [▼] key to make the following screen appear on the display.

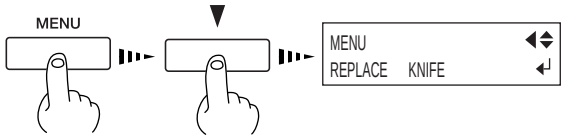

2 Press the [ENTER] key to make the following screen appear on the display.

When the screen shown in the figure appears, the printhead carriage simultaneously moves to the left.

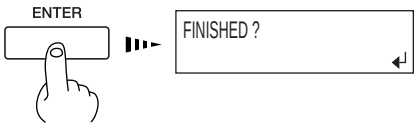

3 Loosen the tool securing screw in the figure, remove the blade holder from the cutting carriage.

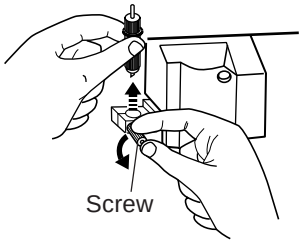

4 Remove the old blade.

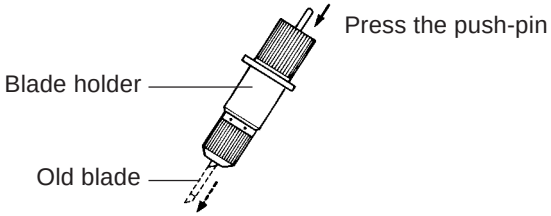

5 Replace with a new blade.

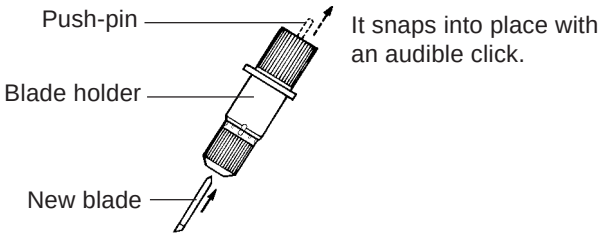

6 Support the tool-securing screw from below and install the blade holder.

Insert the blade holder until the collar is flush with the carriage.

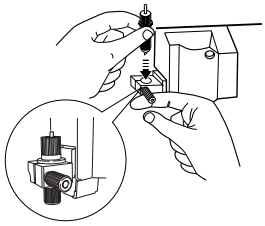

7 Tighten the tool securing screw.

Tug the blade holder upward to make sure it does not come loose.

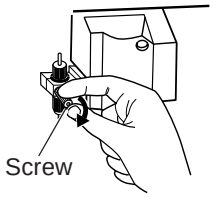

8 Close the front cover, and press the [ENTER] key.

5-7 How to Replace the Separating Knife

Do not touch the tip of the separating knife with your fingers.
Doing so may result in injury.

Do not touch the control panel while head cleaning or other cleaning is in progress.
The print-head carriage may move and cause injury.

If the separating knife becomes dull, replace with the included replacement blade.

1 Press the [MENU] key, and press the [▼] key to make the following screen appear on the display.

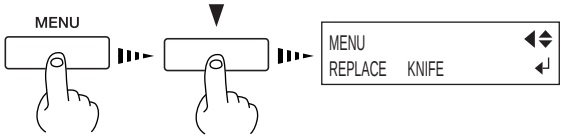

2 Press the [ENTER] key to make the following screen appear on the display.

When the screen shown in the figure appears, the print-head carriage simultaneously moves to the left.

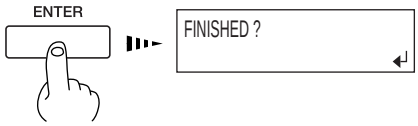

3 Open the front cover, and then remove the separating knife.

> **Point**
>
> If a blade remains in the print-head carriage, use the tweezers in the cleaning kit to remove it.

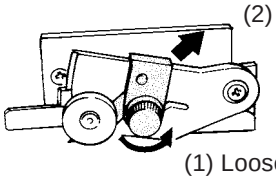

(2) Grasp the screw portion, and slowly pull it out in the direction of the arrow.

(1) Loosen the screw until it slips out.

4 Replace with a new knife.

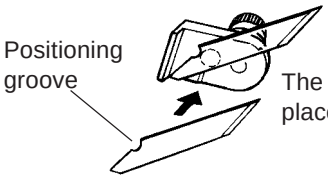

The knife is secured in place by the magnet.

5 Install the separating knife.

6 Close the front cover and press the [ENTER] key.

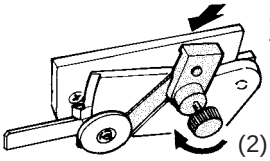

(1) Grasp the screw portion and slowly insert it into the groove.

(2) Tighten the screw.

5-8 When Moving the Unit

Procedures from Preparing to Move Through Reinstalling

To move the machine, you must completely drain all ink inside the machine and secure the print heads in place with retainers to protect them. Attempting to move the machine without first doing this may result in damage to internal components due to leaking ink or damage to the heads.
This operation requires eight unused SOL INK cleaning cartridges. Have these on hand before you start.

Notice

Be sure to use SOL INK cleaning cartridges. Use of any other type may result in breakdown.

Once the preparations for moving are complete, move the machine and fill it with ink with as little delay as possible. Allowing the machine to stand without ink may damage the heads.

When moving the machine, keep it at a temperature between 5 to 40˚C (41 to 104˚F) and at relative humidity between 20 to 80% (with no condensation). Failure to do so may result in breakdown.

Handle the machine with care when moving, keeping it level (not tilted at an angle) and preventing it from striking other objects.

1. Drain the ink and wash the interior.

1 Press the [MENU] key.
Press the [▼] key several times to select [INK CONTROL].

2 Press the [►] key.
Press the [▼] key several times to select [HEAD WASH].
Press the [ENTER] key.

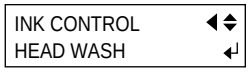

3 Discard the discharged ink in the drain bottle. Attach the drain bottle and press the [ENTER] key.

Be sure to discard the discharged ink. For more information about how to dispose of discharged ink, see "5-5 Disposing of Discharged Ink."

4 Follow the on-screen instructions to insert and remove the cartridges.

Ink discharge and washing are performed over the course of several minutes. When the process ends, the sub power is switched off.
This procedure requires four unused cleaning cartridges.

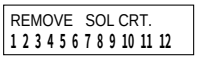

Remove the ink cartridge indicated by the flashing number.

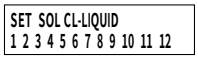

Insert the cleaning cartridge indicated by the flashing number.

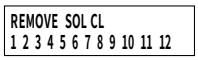

Remove the cleaning cartridge indicated by the flashing number.

5 Turn off the main power switch.

2. Secure the print heads in place.

1 Remove the drain bottle and discard the discharged ink. (Refer to "5-5 Disposing of Discharged Ink.")

Pull out the drain tube from the bottle stand and attach the stopper.

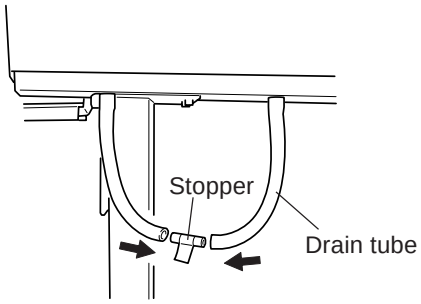

2 Detach the blade holder.

3 Flip the loading lever to the rear.

4 Secure the print heads in place using the retainers.

For information on how to secure in place, go to "1-3 Assembling and Installing" and refer to "Step 4: Remove the Protective Media."

5 Lower the roll media from the printer and detach the shafts.

If necessary, also detach the left and right arms and the stand.

The machine is now ready to be moved.

3. Immediately move the machine and fill it with ink.

1 Once the preparations are complete, move the machine with as little delay as possible.

2 Immediately reinstall the machine and fill with ink.

To reinstall and fill with ink, carry out "1-3 Assembling and Installing" through "1-6 Installing the blade." When filling with ink, four unused cleaning cartridges are required.

Chapter 6: Menus and Keys

This section contains a flowchart of the menus and describes the operation-panel keys and the menu items.

6-1 Menus Flowchart

For details about each of the menus, see the "6-2 Description of Menus."

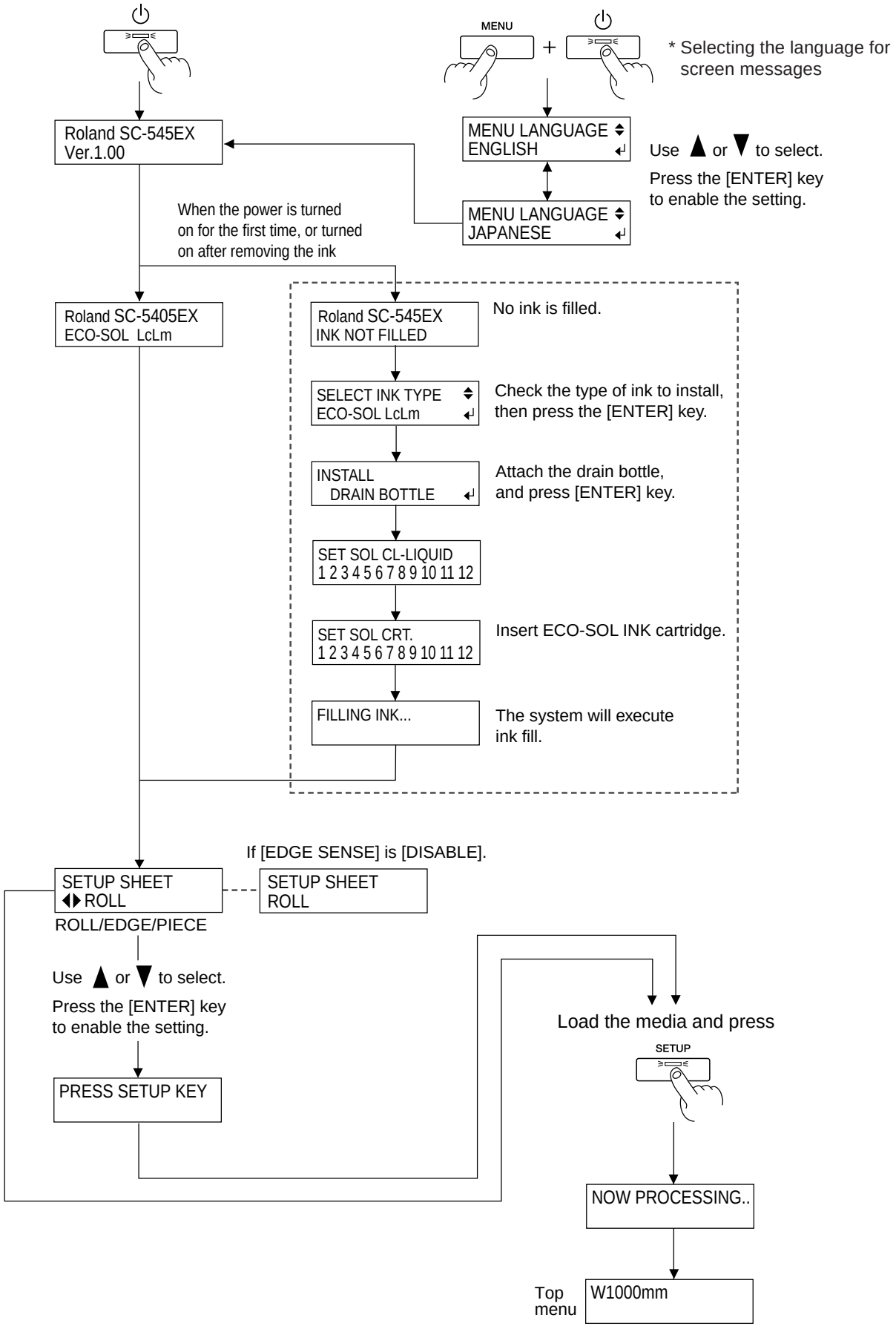

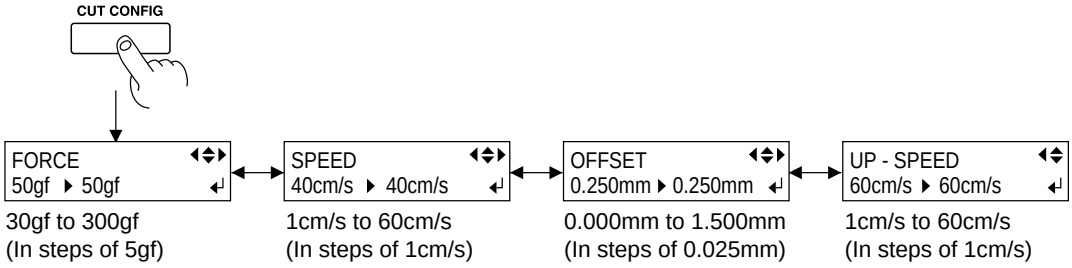

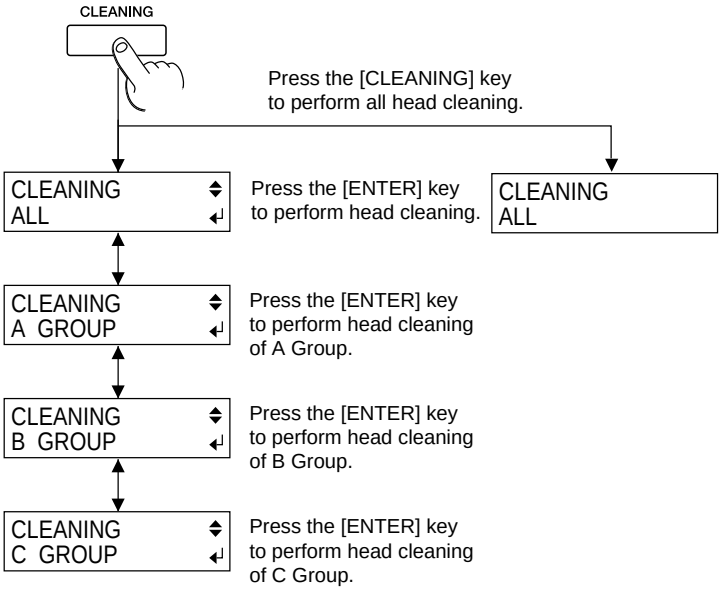

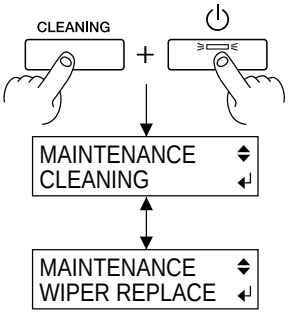

◀
- Go back to the previous menu screen.

▶
- Advance to the next menu screen (or move down one level).

- Select an item.
- Select the value for a setting

- Executes the menu
- Locks in the value for a setting

- Move to the previous menu screen or the next menu screen
- Select the value for a setting
- Moves the media (when specifying the printing location)

► [ ]
- Move to a submenu screen
- Moves the print-head carriage (when specifying the printing location)

[ ] ◄
- Move to the previous menu screen
- Moves the print-head carriage (when specifying the printing location)

ENTER
- Executes the menu
- Locks in the value for a setting

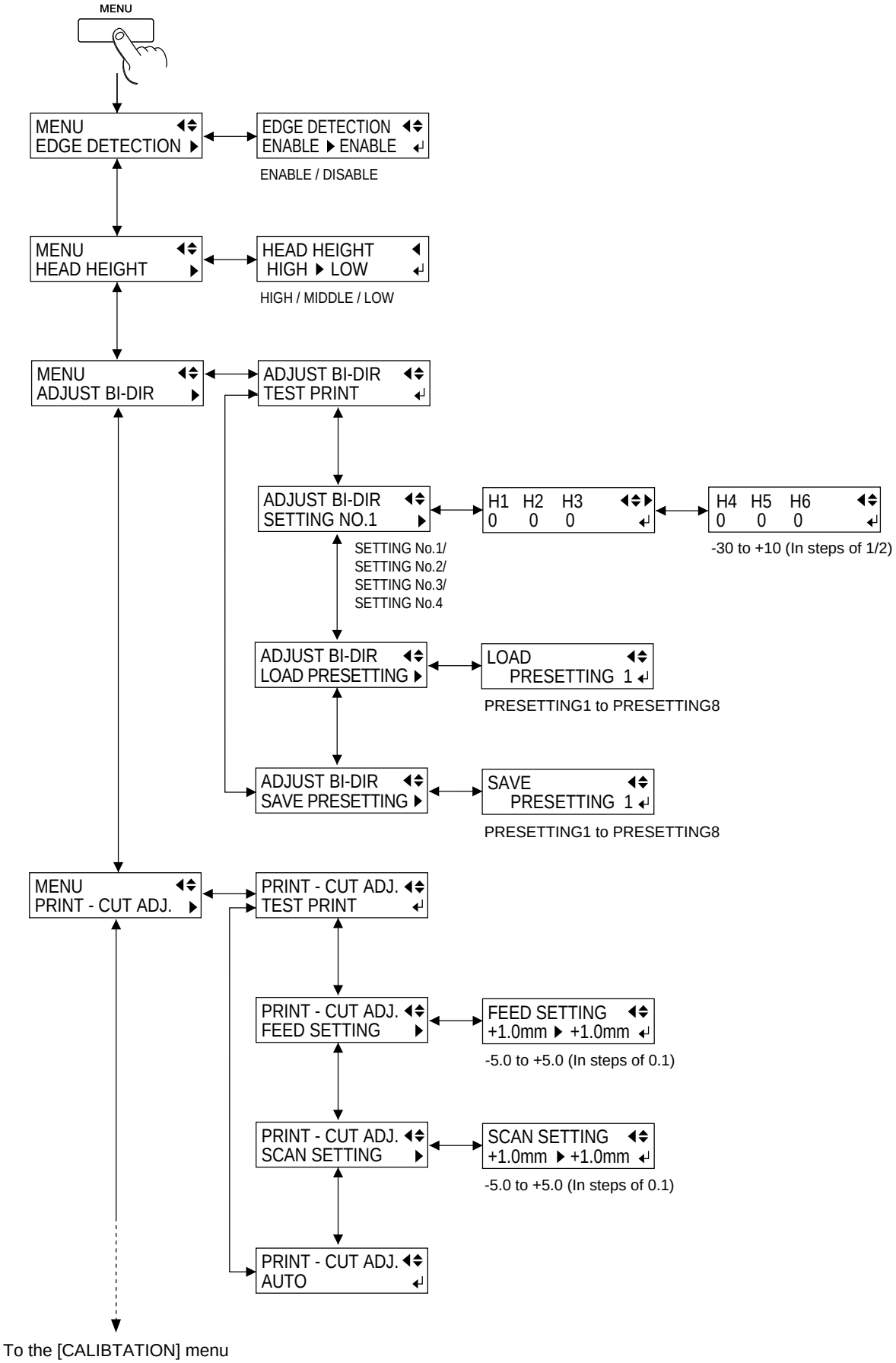
MENU
MENU
EDGE DETECTION
EDGE DETECTION
ENABLE ▶ ENABLE
ENABLE / DISABLE
MENU
HEAD HEIGHT
HEAD HEIGHT
HIGH ▶ LOW
HIGH / MIDDLE / LOW
MENU
ADJUST BI-DIR
ADJUST BI-DIR
TEST PRINT
ADJUST BI-DIR
SETTING NO.1
H1 H2 H3
0 0 0
H4 H5 H6
0 0 0
-30 to +10 (In steps of 1/2)
SETTING No.1/
SETTING No.2/
SETTING No.3/
SETTING No.4
ADJUST BI-DIR
LOAD PRESETTING
LOAD
PRESETTING 1
PRESETTING1 to PRESETTING8
ADJUST BI-DIR
SAVE PRESETTING
SAVE
PRESETTING 1
PRESETTING1 to PRESETTING8
MENU
PRINT - CUT ADJ.
PRINT - CUT ADJ.
TEST PRINT
PRINT - CUT ADJ.
FEED SETTING
FEED SETTING
+1.0mm ▶ +1.0mm
-5.0 to +5.0 (In steps of 0.1)
PRINT - CUT ADJ.
SCAN SETTING
SCAN SETTING
+1.0mm ▶ +1.0mm
-5.0 to +5.0 (In steps of 0.1)
PRINT - CUT ADJ.
AUTO
To the [CALIBTATION] menu

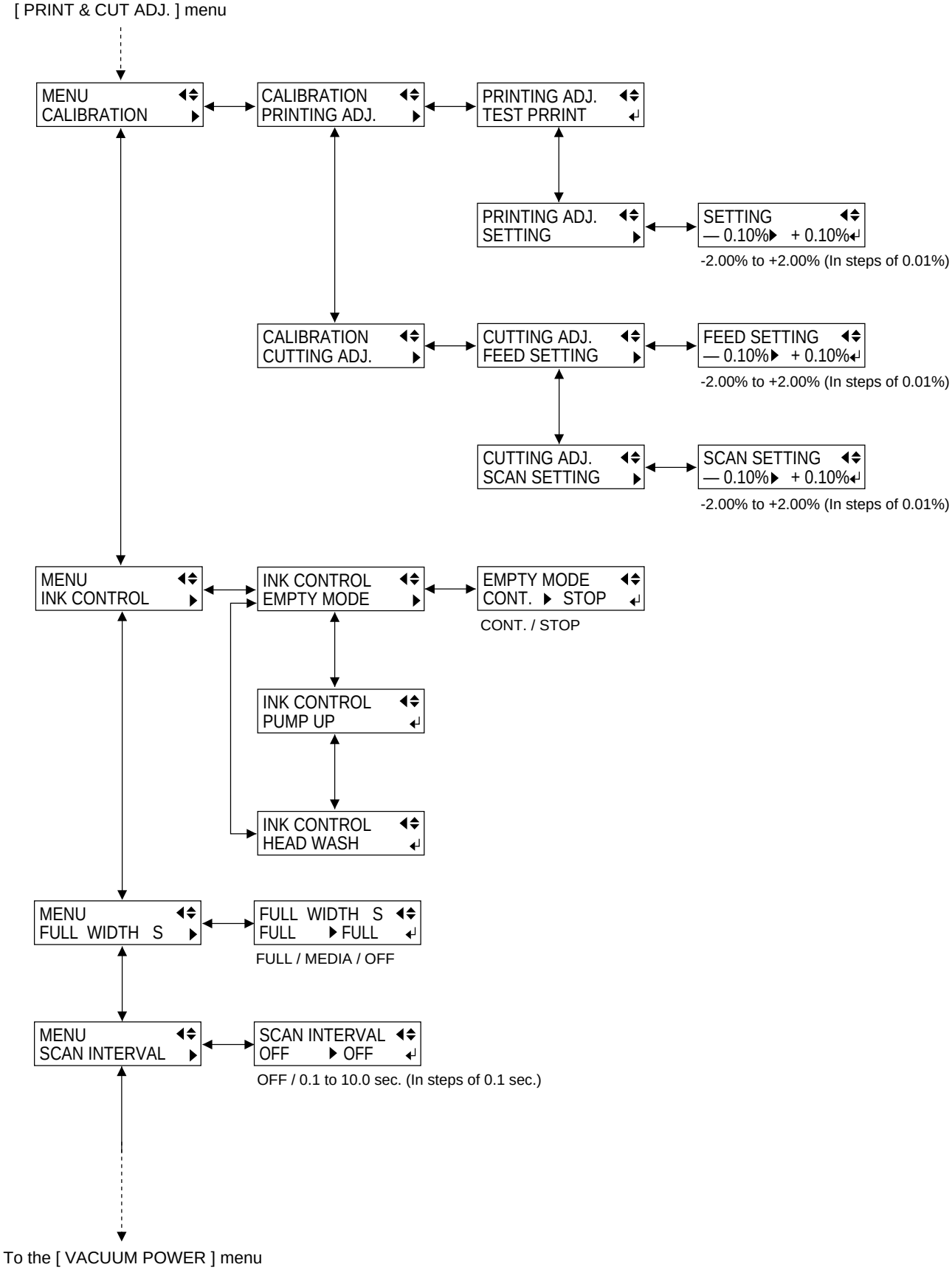
[PRINT & CUT ADJ.] menu
MENU
CALIBRATION
CALIBRATION
PRINTING ADJ.
PRINTING ADJ.
TEST PRRINT
PRINTING ADJ.
SETTING
SETTING
— 0.10% + 0.10%
-2.00% to +2.00% (In steps of 0.01%)
CALIBRATION
CUTTING ADJ.
CUTTING ADJ.
FEED SETTING
FEED SETTING
— 0.10% + 0.10%
-2.00% to +2.00% (In steps of 0.01%)
CUTTING ADJ.
SCAN SETTING
SCAN SETTING
— 0.10% + 0.10%
-2.00% to +2.00% (In steps of 0.01%)
MENU
INK CONTROL
INK CONTROL
EMPTY MODE
EMPTY MODE
CONT. STOP
CONT. / STOP
INK CONTROL
PUMP UP
INK CONTROL
HEAD WASH
MENU
FULL WIDTH S
FULL WIDTH S
FULL FULL
FULL / MEDIA / OFF
MENU
SCAN INTERVAL
SCAN INTERVAL
OFF OFF
OFF / 0.1 to 10.0 sec. (In steps of 0.1 sec.)
To the [VACUUM POWER] menu

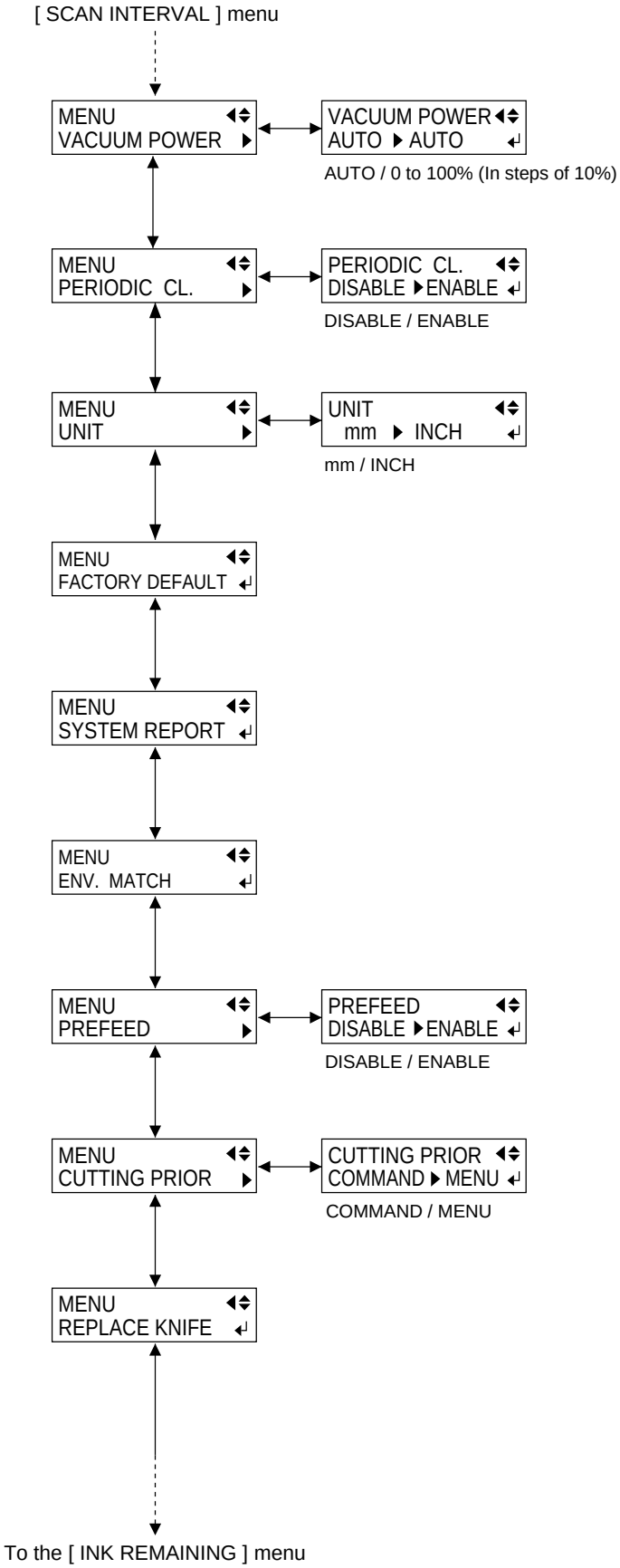
[SCAN INTERVAL] menu
MENU
VACUUM POWER
VACUUM POWER
AUTO ▶ AUTO
AUTO / 0 to 100% (In steps of 10%)
MENU
PERIODIC CL.
PERIODIC CL.
DISABLE ▶ENABLE
DISABLE / ENABLE
MENU
UNIT
UNIT
mm ▶ INCH
mm / INCH
MENU
FACTORY DEFAULT
MENU
SYSTEM REPORT
MENU
ENV. MATCH
MENU
PREFEED
PREFEED
DISABLE ▶ENABLE
DISABLE / ENABLE
MENU
CUTTING PRIOR
CUTTING PRIOR
COMMAND ▶ MENU
COMMAND / MENU
MENU
REPLACE KNIFE
To the [INK REMAINING] menu

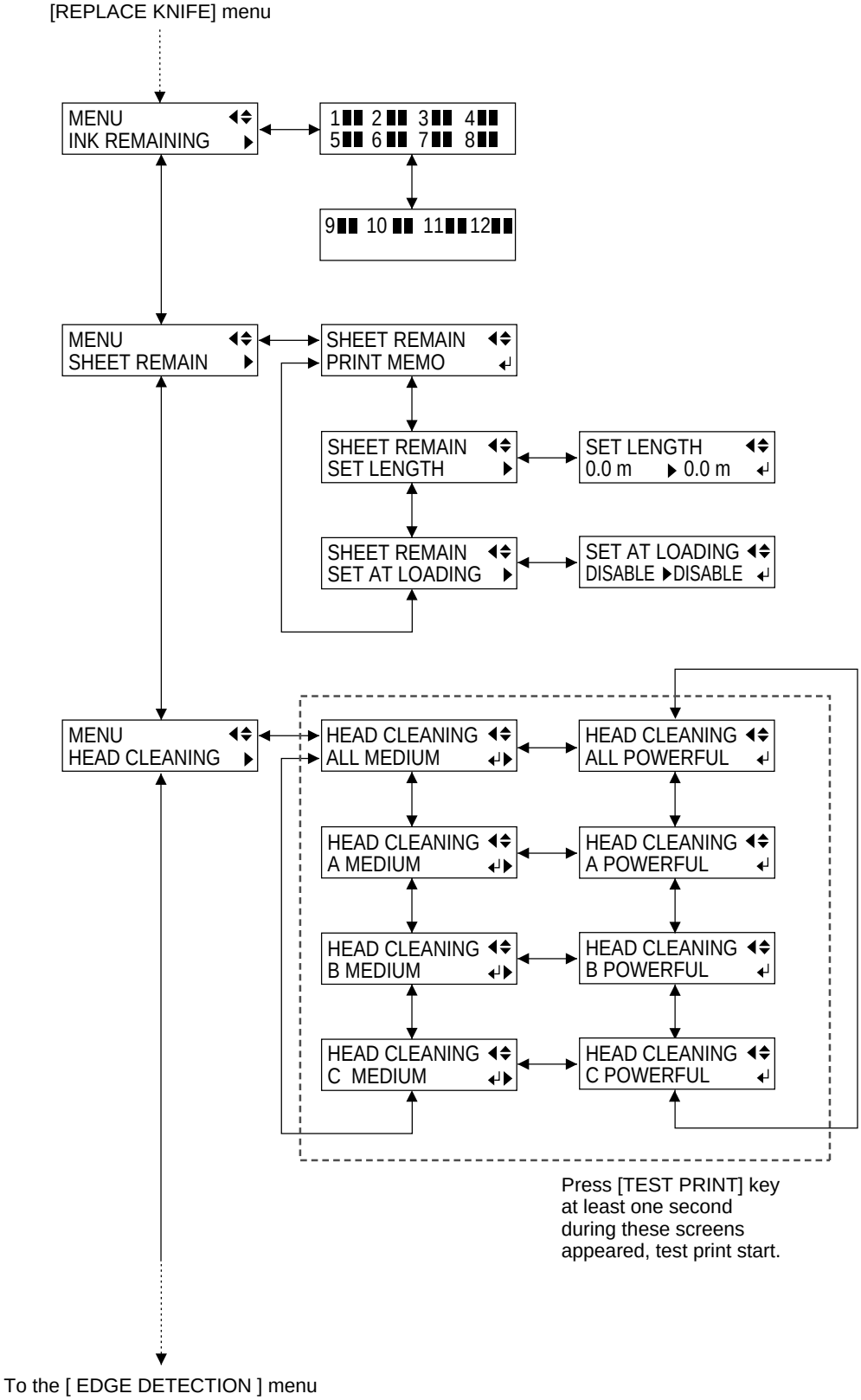
[REPLACE KNIFE] menu
MENU
INK REMAINING
1 2 3 4
5 6 7 8
9 10 11 12
MENU
SHEET REMAIN
SHEET REMAIN
PRINT MEMO
SHEET REMAIN
SET LENGTH
SET LENGTH
0.0 m 0.0 m
SHEET REMAIN
SET AT LOADING
SET AT LOADING
DISABLE DISABLE
MENU
HEAD CLEANING
HEAD CLEANING
ALL MEDIUM
HEAD CLEANING
ALL POWERFUL
HEAD CLEANING
A MEDIUM
HEAD CLEANING
A POWERFUL
HEAD CLEANING
B MEDIUM
HEAD CLEANING
B POWERFUL
HEAD CLEANING
C MEDIUM
HEAD CLEANING
C POWERFUL
Press [TEST PRINT] key
at least one second
during these screens
appeared, test print start.
To the [EDGE DETECTION] menu

6-2 Description of Menus

Top menu	Submenu	Function	Setting range	Default value
EDGE DETECTION	—	This specifies whether detection of the front and rear edges of the media is enabled or disabled. This should normally be set to [ENABLE]. When loading transparent media, set this to [DISABLE]. When set to [DISABLE], then during media setup only the [ROLL] selection is available. When doing this, ensure a margin of 75 mm (3 in.) or more from the leading edge of the media to the start position for printing or cutting. When [EDGE SENSE] is set to [DISABLE], the machine cannot detect when media runs out. In such cases, printing operation does not stop when the media runs out, and there is a chance that the platen may become soiled by ink or that ink may get inside and damage the machine. If the media while printing is in progress, immediately press the [PAUSE] key to quit printing.	ENABLE/ DISABLE	ENABLE
HEAD HEIGHT	—	This sets the height of the print heads. To make the setting, display this menu, then move the lever on the side of the unit's print-head carriage.	HIGH/ MIDDLE/ LOW	MIDDLE
ADJUST BI-DIR	 TEST PRINT SETTING NO.1 SETTING NO.2 SETTING NO.3 SETTING NO.4 LOAD PRESETTING SAVE PRESETTING	This adjusts for slippage when performing bidirectional printing. This must be readjusted when you have replaced the media with a different type or adjusted the head height. [TEST PRINT]: This menu is for verifying the adjustment. [SETTING NO.1], [SETTING NO.2], [SETTING NO.3], [SETTING NO.4] : This sets the correction value. [LOAD PRESETTING] : This loads adjustment values set in memory 1 through 8. [SAVE PRESETTING] : This takes the adjustment values set for No. 1 through No. 4 and saves them as [PRESETTING 1] through [PRESETTING 8]. You can save up to eight adjustment-value patterns.	-30 to +10 (In steps of 1/2)	0
PRINT - CUT ADJ.	TEST PRINT FEED SETTING SCAN SETTING AUTO	[TEST PRINT]: This prints a test pattern for adjustment use. [FEED SETTING]: This sets the adjustment value for the media-feed direction. [SCAN SETTING]: This sets the adjustment value for the left-right direction (the carriage-movement direction). [AUTO]: Alignment of the printing and cutting positions is performed automatically.	— [FEED SETTING] [SCAN SETTING] -5.0 to +5.0 mm (In steps of 0.1 mm) —	— 0 mm 0 mm —
CALIBRATION	PRINTING ADJ. CUTTING ADJ.	This corrects for errors in the amount of feed of the grit rollers due the type of media. Be sure to make this setting when you have replaced the media with a different type. Make this setting again when horizontal stripes are plainly visible on printing results. [TEST PRINT]: This menu is for verifying the adjustment. [SETTING]: This sets the correction value. This corrects for the cutting length (distance correction) when using the machine for cutting only. When using the machine for printing and cutting, always set the offset value to [0]. [FEED SETTING]: This sets the adjustment value for the media-feed direction. [SCAN SETTING]: This sets the adjustment value for the scan direction (the carriage-movement direction).	[PRINTING ADJ.] -2.0% to +2.0% (In steps of 0.05%) [CUTTING ADJ.] -2.0% to +2.0% (In steps of 0.01%)	0% 0%

Top menu	Submenu	Function	Setting range	Default value
INK CONTROL	EMPTY MODE	[EMPTY MODE]: When replacement of the ink cartridge becomes necessary while printing is in progress, this setting determines whether printing continues or pauses. This setting is used when the ink cartridge cannot be changed immediately during printing, such as during unattended operation at night. [CONT.] causes printing to continue without pause even if ink refilling becomes necessary. To replace an ink cartridge, press the [PAUSE] key to pause operation, then replace with a new cartridge. Pressing the [PAUSE] key again resumes printing. Printing continues with the small amount of ink remaining, so the printed image may become faint as the ink runs out. In general, it should possible to perform about 1 m^2 (10 ft^2) of printing once this message appears, although the actual varies widely according to the amount of ink needed for the particular image. Printing is continued only for the data currently being printed. Operation stops after one image is output. [STOP] causes operation to pause immediately when the ink cartridge needs to be changed. Printing is resumed by replacing the cartridge. Note, however, that the colors of an image in progress may no longer match perfectly. When performing long printing, replace with sufficient ink cartridge to print.	[EMPTY MODE] CONT./ STOP	[EMPTY MODE] STOP
	PUMP UP HEAD WASH	[PUMP UP] : Drains ink from the print heads. [HEAD WASH] : This washes the print heads with optionally available cleaning cartridges.		
FULL WIDTH S	—	This sets the movement width of the print-head carriage when printing. Using this function may improve printing quality by maintaining a uniform speed for media feed. However, printing may take more time. When using the print heater, be sure to set this menu item to [FULL]. [FULL]: The movement width of the print-head carriage is always the full width. [MEDIA]: The width changes depending on the width of the media. [OFF]: The width changes according to the printing data.	FULL/ MEDIA/OFF	FULL
SCAN INTERVAL	—	This sets the ink-drying time. If problems with ink stains occur, setting this value to a longer time may improve printing quality.	OFF/ 0.1 to 10.0 sec (in steps of 0.1 sec)	OFF
VACUUM POWER	—	This adjusts the suction force of the fan installed under the platen to make the media contact the platen. Adjust this value when the media warps due to heat or sticks to the platen. Increasing the value makes the suction force stronger, but because it lowers the temperature of the platen, the media may become difficult to warm. [AUTO]: The suction force is adjusted automatically according to the width of media. [0 to 100%] (in steps of 10%): The suction force remains constant at the set value.	AUTO/ 0 to 100% (in steps of 10%)	AUTO

Top menu	Submenu	Function	Setting range	Default value
PERIODIC CL.	—	This specifies whether the automatic cleaning during printing is enabled or disabled. When set to [ENABLE], automatic cleaning is performed during printing, and prevents drop-out and ink drips. Because automatic cleaning is performed during printing, printing may take more time. The lower the temperature of the work area, the greater is the number of times that automatic cleaning is performed. Also, because printing is interrupted temporarily during automatic cleaning, horizontal stripes may occur in the printing.	DISABLE/ ENABLE	DISABLE
UNIT	—	This selects millimeters or inches as the unit of measurement for the width displayed on the top menu after setting up the media. When inch display is used, values are displayed to the first digit to the right of the decimal point.	mm / INCH	mm
FACTORY DEFAULT	—	This returns all menu settings to their original values when shipped from the factory. For more about the factory defaults for the various settings, see the "Default value" entry for each menu setting in this section.	—	—
SYSTEM REPORT	—	This prints the current status of settings and other system information.	—	—
ENV.MATCH	—	This performs automatic adjustment on the machine to obtain a state optimized to the operating environment (temperature and humidity).	—	—
PREFEED	—	This specifies whether the media prefeed function is enabled or disabled. When set to [ENABLE], an amount of media equal to the size of the data sent from the computer is fed out first, and then printing or cutting are performed.	DISABLE/ ENABLE	DISABLE
CUTTING PRIOR	—	This setting is made cutting conditions set with a program are made to take priority. When set to [MENU], cutting is performed using the values set with the machine.	COMMAND/ MENU	COMMAND
REPLACE KNIFE	—	This setting is used when replacing the separating knife, or installing or removing cutter blade	—	—
INK REMAINING	—	This shows the amount of ink left after each of the ink cartridges has been installed. The fewer the markers ("□"), the less ink is left. * If a partially used ink cartridge is removed and reinstalled, or if a partially used ink cartridge is installed, the cartridge is taken to be unused, and the displayed amount of remaining ink is not true.	—	—

Top menu	Submenu	Function	Setting range	Default value
SHEET REMAIN	SET LENGTH	You can display how much of the media in use is left. Once you set the amount of media remaining, the amount remaining is displayed at the top menu until it reaches zero. If you cancel the setup such as by removing the media or raising the loading lever, the amount remaining at that time flashes on the screen. The amount of media remaining is not updated automatically when you change the media. Redo the setting whenever you change the media. You can also make the setting to display this menu automatically whenever you change the media. Note, however, that when sheet media is loaded (that is, when [SETUP SHEET] is set to [PIECE]), the amount of media remaining is set automatically. The remaining amount that is displayed is only an estimate, and its accuracy is not assured.	[SET LENGTH] 0.0 to 99.9 m (in steps of 0.1 m) [SET AT LOADING] ENABLE/ DISABLE	[SET LENGTH] 0.0 m (not displayed) [SET AT LOADING] DISABLE
	SET AT LOADING	Setting this to [ENABLE] automatically displays [SHEET REMAIN] whenever you change the media and finish setup. This makes it impossible to go on to the next operation unless you redo the setting for the amount remaining. This can be useful for keeping you from forgetting to redo the setting when you change the media. When you set this to [ENABLE], however, be sure to also set the [EDGE SENSE] menu item to [ENABLE]. When [EDGE SENSE] is set to [DISABLE], then [SHEET REMAIN] is not displayed automatically, regardless of the setting for [SET AT LOADING]. Also, when sheet media is loaded (that is, when [SETUP SHEET] is set to [PIECE]), the amount of media remaining is set automatically, and so this menu is not displayed.		
	PRINT MEMO	This prints the amount of media remaining that is displayed at the top menu. You use this when you want to make a record of the remaining length of the media now in use. Printing the amount of media remaining before you change the media enables you to refer to the printed record and use the value to make the setting for the remaining amount the next time you use the media. Note, however, that continuing by performing the next output starts the output on top of the portion where the amount of remaining media is printed. After you print the amount remaining, we recommend using [SHEET CUT] key to cut off the media.		
HEAD CLEANING		If print shows a problem, clean the print head. Because cleaning subjects the head to wear and consumes ink, it should only be performed when absolutely necessary. Performing cleaning from the Powerful menu in particular subjects the head to early wear and used up large amounts of ink.	—	—
	ALL MEDIUM A MEDIUM B MEDIUM C MEDIUM	[ALL MEDIUM]/[A MEDIUM]/[B MEDIUM]/[C MEDIUM]: Performs cleaning of the print heads. After cleaning, carry out a printing test to make sure there are no problems with printing quality. Normally, head cleaning should be performed by pressing the [CLEANING] key.		
	ALL POWERFUL A POWERFUL B POWERFUL C POWERFUL	[ALL POWERFUL]/[A POWERFUL]/[B POWERFUL]/[C POWERFUL]: Used when performing cleaning with Medium several times does not restore the printing quality. After cleaning, carry out a printing test to make sure there are no problems with printing quality.		

6-3 Description of Keys

Key	Top menu	Function	Setting range	Default value
	—	This switches on and off the sub power . When the power is switched on, the POWER LED lights up.	—	—
	—	This detects the presence and the width of the media, and displays the printable width. The SETUP LED flashes while detection of media width is in progress. When setup finishes, the SETUP LED lights up continuously. Also press this key when removing the media. Pressing this key when any of the various menu screens is displayed returns you to the top screen. (When this is done, media setup cannot be canceled.)	—	—
	—	The [PAUSE] key pauses printing. The PAUSE LED lights up while paused. Pressing this key again cancels the paused state. Holding down the [SETUP] key for about 1 second while paused causes remaining data to be cleared and cancels the media's setup state.	—	—
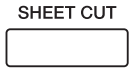	—	This cuts off the media at the present location of the blade tip. Press this to cut off the portion already printed or cut from the roll. You cannot sever a piece of media while printing or cutting is in progress.	—	
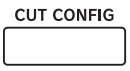	FORCE	This enters the menu for setting the conditions for cutting. You can set the values for blade force, cutting speed, blade offset compensation, and tool movement speed when raising the tool. For more information, see "6-1 Menus Flowchart." * When [CUTTING PRIOR] on the machine's menu has been set to [COMMAND], the program's settings for the cutting conditions take priority. To give priority to the cutting conditions set on the machine, turn off the program settings, or set the [CUTTING PRIOR] menu to [MENU].	[FORCE] 30 to 300 gf (In steps of 5 gf) [SPEED] 1 to 60 cm/s (In steps of 1 cm/s) [OFFSET] 0 to 1.5 mm (In steps of 0.025 mm) [UP-SPEED] 1 to 60 cm/s (In steps of 1 cm/s)	[FORCE] 50 gf [SPEED] 40 cm/s [OFFSET] 0.25 mm [UP-SPEED] 60 cm/s
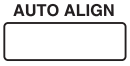	BASE -ALIGN	Pressing the [AUTO ALIGN] key after setup has finished displays the screen for selecting the mode for reading crop marks. [BASE-ALIGN]: This reads the four crop marks and corrects the axes and distance for the origin-point location, scanning direction, and feed direction. [BASE]: This reads the lower-right crop mark and corrects only the origin-point location.	BASE -ALIGN/BASE	—
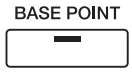	—	This sets the print or cutting start location in the scanning direction (the direction of carriage movement). Pressing the [BASE POINT] key when align points have already been set clears all align-point settings.	—	—

Key	Top menu	Function	Setting range	Default value
ALIGN POINT	—	This corrects cutting data to align it with printing data that has been output. It is valid only during cutting.	—	—
ENTER	—	This is used to accept, execute, or save the item shown on the display.	—	—
TEST PRINT	—	Holding down the [TEST PRINT] key for one second or longer while the SETUP LED is lit performs a printing test.	—	—
CLEANING	—	This enters the [HEAD CLEANING] menu for cleaning the print heads. Cleaning can be performed while in any state. [ALL], [A GROUP], [B GROUP], or [C GROUP]: Begins cleaning of the print heads. Holding down for one second carries out cleaning for all the heads. After cleaning, carry out a printing test to make sure there are no problems.	—	—
TEST CUT	—	Holding down this key for 1 second or longer performs a cutting test. If there are problems with the quality of cutting results for the media, press the [CUT CONFIG] key and adjust the cutting conditions.	—	—
TOOL UP/DOWN	—	This forces the blade to move up or down.	—	—
MENU	—	This enters the menu mode. When a menu is displayed, the [▲] and [▼] keys move to the next menu, the [►] moves to a submenu, and the [◄] key moves to the previous screen.	—	—
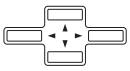	—	These move the media and the cartridge. When a menu is displayed, these move among the menu items.	—	—
MENU + ⏻ −	MENU LANGUAGE	This sets the language for screen messages. You can select either English or Japanese.	ENGLISH/ JAPANESE	ENGLISH

Chapter 7:
What to Do If...

This section describes error messages that may appear on the display and how to resolve problems that can occur during operation.

7-1 What to Do If...

The Machine Doesn't Run

The Power Does Not Switch On

Is the main power switched on?

If the power does not come on when you press the [POWER] key, the main power at the back of the machine may not be switched on. Make sure the main power is switched on, then press the [POWER] key again.

Printing Doesn't Start When Data Is Sent

Are the network settings correct?

Make sure there are no errors in the network settings. For more information about making the connection to a network, see "Roland-PrintServer Network Settings Guide."

Has media been loaded (the SETUP LED is lit)?

If the SETUP LED is not illuminated, make sure the media is loaded correctly and press the [SETUP] key to illuminate the SETUP LED.

Is the top menu displayed?

If the top menu isn't displayed, printing doesn't start even when data is sent from the computer. Press the [SETUP] key, and display the top menu.

Top menu

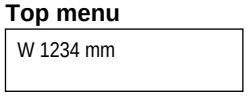

Is the PAUSE LED illuminated?

If the [PAUSE] key has been pressed and the PAUSE LED is lighted, the unit has been paused.
To resume printing or cutting, press the [PAUSE] key again. The PAUSE LED is extinguished, and printing or cutting resumes.
To terminate printing or cutting, first stop the transmission of printing or cutting instructions from the computer to this machine. Then press the [SETUP] key. Hold down for about 1 second. This deletes the printing or cutting instructions that have already been sent from the computer to this machine, and printing or cutting is stopped.

Has ink run out?

When printing or cutting data is sent while the screen shown in the figure is displayed, a message appears and a warning beep sounds.
At the same time, operation pauses. When the ink cartridge is replaced with a new one, printing or cutting starts.

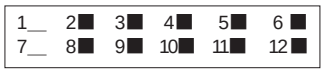

This screen show 1 and 7 is run out.

Clean, Attractive Printing Is Impossible

If Drop-out Occurs with Printed Images

Clean the print heads. (see "5-1 Cleaning the Print heads")

The Printed Images Are Not Clean

Clean the platen and pinch rollers. (see "5-4 Other Cleaning Tasks")

The Print Heads Scrape the Surface of the Media

Is the loaded media very thick?

If media feed is not smooth because the media catches on the head, then adjust the height of the print heads. (refer to "2-3 Loading Media" and see "When Loading Thick Media (Only When printing)."
When the height of the print head has been adjusted, it is necessary to perform bidirectional correction. For more information about bidirectional correction, refer to "4-5 Making Corrections for Printing" and see "Bidirectional Correction."
If you are using media that becomes uneven when printed, then perform unidirectional printing. With unidirectional printing, unevenness is less conspicuous than bidirectional printing.
Also, if the print heads scrape the media even when the heads are raised, then do not use that media.
Doing so may not only cause paper jams, but may soil the media (the printing surface) and impair printing accuracy.

The Results of Printing Are Coarse

Has feed correction been performed?

Correcting the amount of feed improves the dot-positioning accuracy in the feed direction, which can help enhance image quality.
If the type of media was changed, refer to "4-5 Making Corrections for Printing" and see "Feed Correction," and perform correction for feed.

Has bidirectional correction been performed?

If misalignment like in the example occurs when performing bidirectional printing, then carry out correction at the [BIDIRECTION] menu. (refer to "4-5 Making Corrections for Printing" and see "Bidirectional Correction")
Be sure to make this setting when you have replaced the media with a different type, or if you have adjusted the head height and printing is misaligned.

[EXAMPLE]

OK: Correct

Not OK: Single lines not produced

Has the media warmed up sufficiently?

The results of printing may be coarse when the media is not warm enough. In particular, the edges of the media tend not to become as warm as the center, which may result in ink drips or unevenness, depending on the printing data. If this happens, increase the preset temperature and perform printing again. If the printing results don't improve even when you increase the preset temperature, the ambient temperature may be too low. Be sure to perform printing in the recommended operating environment.
Setting the [SCAN INTERVAL] menu item may improve printing quality. Please refer to "Chapter 6: Menus and Keys."

The Printing Length Is Not Accurate

Has feed correction been performed?

To correct the amount of feed, refer to "4-5 Making Corrections for Printing" and see "Feed Correction," and make the correction to match the media you're using.

During Printing, Ink Drips from the Print-head Carriage and Soils the Media (the printing surface)

The following may cause ink to drip on the media during printing.

- Dust or fiber-containing grime around the heads may have absorbed ink.
- The heads scraping the media may have caused ink to fail to be discharged, resulting in ink buildup in the heads.

If this happens, refer to "5-2 Cleaning Using the Cleaning Kit" and clean the heads.
We recommend carrying out periodic head cleaning.
Also, before you start printing, perform a printing test to make sure there is no dot drop-out.

Printing Goes Beyond the Loaded Media

Has the media been loaded at an angle?

If the loaded media is not straight, it may extend outside the printing or cutting area.
Refer to "2-3 Loading Media" and load the media correctly.

Media Feed Is Not Smooth (slippage occurs)

Is thick media being used?

If the surface of the media rubs against the print heads and smooth feed is impossible, then adjust the height of the print heads. (refer to "2-3 Loading Media" and see "When Loading Thick Media (Only When Printing)")
When the height of the print head has been adjusted, it is necessary to perform bidirectional correction (only when performing bidirectional printing). For more information about bidirectional correction, refer to "4-5 Making Corrections for Printing" and see "Bidirectional Correction."

If using sheet media, does the loaded media contact areas such as the stand's media flange?

If the sheet media contacts the media flange or the like at the back of the unit, shift the retainer to a location where the media doesn't make contact.
If the media touches an obstruction while printing is in progress, normal media feed is not performed, and image quality may suffer or the media may jam.

Is the sheet media loaded at an angle? Are the left and right edges of the media not straight?

If the media is loaded at an angle or if the left and right sides of the media are not cut straight, the location of the edges may shift as feed is carried out. This may cause the media to rub against the inner side of this machine or be displaced from the printing or cutting area.

Is the roll media loaded correctly?

If the roll media is not loaded correctly, the media may come loose or advance at an angle. Refer to "2-3 Loading Media" and see "Loading Roll Media," and load the media correctly.

The Printing and Cutting Positions Are Not Aligned

Is the media loaded correctly?

If the media is not loaded correctly, the media meanders as it is fed, and the printing and cutting positions become misaligned. Refer to the section "2-3 Loading Media" and load the media correctly.

The positions are not aligned even when [AUTO] in [PRINT-CUT ADJ.] is executed.

Depending on the type of media, automatic detection of square marks may not be possible.
In such cases, perform the alignment manually. (Refer to "4-6 Making Corrections for Printing and Cutting" and see "Adjusting Manually")

The printing and cutting positions in direction of carriage movement are misaligned.

The printing length in the carriage direction may change depending on the operating environment (temperature and humidity). Execute [ENV. MATCH] to adjust the machine to match the operating environment. (Refer to "1-5 Switching On the Power for the First Time" and see "Step 2 : Match the Machine to the Environment Where Installed")

Is the offset value for [CUTTING ADJ.] something other than zero (0)?

When you're performing printing and cutting, use a value of "0" in the menu of [CALIBRATION] - [CUTTING ADJ.].

Are you using media that exhibits large expansion and contraction?

When you're performing printing and cutting, misalignment occurs if the media expands or contracts. If this happens, try performing printing with crop marks, then setting the base point and one or more align points and performing cutting. This corrects for expansion and contraction of the media.

Automatic setting of the base point and the align point was performed, but the positions are not aligned.

Depending on the type of media or lamination, automatic detection of crop marks may not be possible. In such cases, set the base point and align point manually. (Refer to "2-7 Reloading the Media and Performing Cutting" and see "Aligning Manually")

Media Wrinkles or Warps

Media Wrinkles When Performing Printing

Was the media allowed to stand while heated?

Depending on the type of media, it may wrinkle when performing printing after it is left on the platen for 30 minutes to an hour with the print heater temperature at 40˚C. When you are not printing continuously, remove the media or reduce the preset temperature to 30˚C.

Media Warps Before Performing Printing

Is the temperature of the room too low?

Depending on the type of media, it may tend to warp when there is a large difference between the ambient temperature and the print heater temperature.

If the left and right edges of the media warp: use media clamps.
If the front edge of the media warps: reduce the print heater temperature or increase the ambient temperature.

It may be possible to prevent media from warping by setting the [VACUUM POWER] menu item. Please refer to "Chapter 6: Menus and Keys."

The Media Becomes Jammed

If [MOTOR ERROR : TURN OFF POWER] Appears and Operation Stops

Follow the steps below to clear the error.

1. Press the [POWER] key to switch off the sub power.
2. Remove the jammed media. Cut off any creased or torn portions.
3. Press the [POWER] key to turn on the sub power.
4. Correct whatever caused the media to jam.
   (For example, if thick media has been loaded, then adjust the height of the print heads.)
5. Load the media and carry out setup.
6. Press the [CLEANING] key to perform head cleaning and a printing test (see "5-1 Cleaning the Print heads").
7. Send the printing or cutting data and perform printing or cutting.

Point

Jammed media may damage or soil the print heads. Be sure to perform head cleaning first before sending the printing data.

What to Do If the Print-head Carriage Does Not Operate

During operation, if for some reason the print-head carriage does not return to the standby position, then following the procedure, cap the print heads, and contact your authorized Roland DG Corp. dealer or service center.
If the print-head carriage is allowed to stand for a prolonged period with the print heads uncapped (that is with the print-head carriage over the platen), the heads may become clogged or even damaged.

Capping the Print heads

1 Make sure the main power is switched off, then open the cover on the right side of the machine.

2 Open the front cover and move the print-head carriage to the standby position by hand.

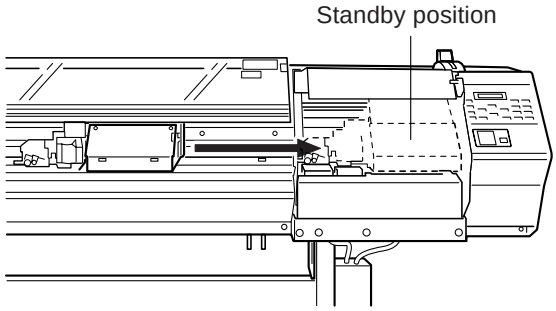

3 Insert the oval end of the pipe included with the machine into the hole in the bottom of the machine, then rotate the pipe.

The cap unit rises.

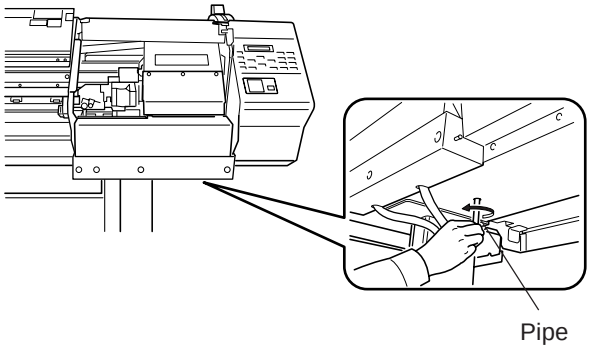

4 Align the guides at the two ends of the cap unit with the guides at the two ends of the print-head carriage.

Turn the pipe more bring the cap unit close to the print-head carriage.

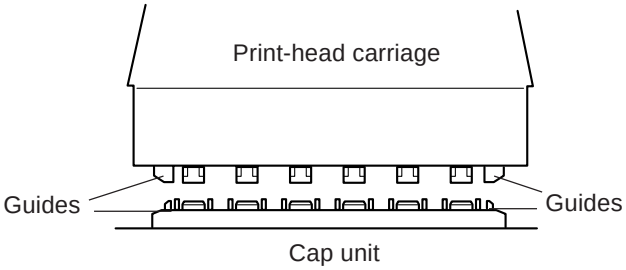

5 When the print-head carriage comes into contact with the caps, rotate the pipe one or two turns more.

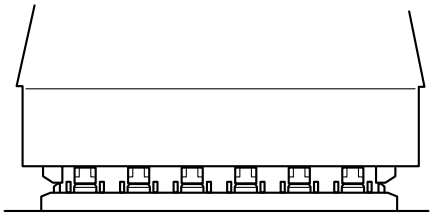

Make sure the print-head carriage and the caps are touching, then contact your authorized Roland DG Corp. dealer or service center.

7-2 What to Do If an Error Message Appears

Messages	Meaning	Action
CLOSE THE COVER	An operation command was given while the cover or front cover is open.	Close the cover or front cover.
AVOIDING DRY-UP TURN OFF POWER	The print head was returned to its standby position to be capped, canceling current printing job. Because emergency stop was effected more than 10 min.	Turn power off by pressing [POWER] key to reset. Interrupted printing is not resumed. Repeat printing from the beginning.
1_ 2■ 3■ 4■ 5■ 6■ 7_ 8■ 9■ 10■ 11■ 12■	Only a small amount of ink remains. * The message at left indicates that there is little remaining ink in the No. 1 and No. 7 ink-cartridge ports.	Replace the empty ink cartridge.
SET SOL CRT. 1 2 3 4 5 6 7 8 9 10 11 12	An ink cartridge was removed. A request to insert an ink cartridge was made from this machine.	Insert the specified ink cartridge.
REMOVE SOL CRT. 1 2 3 4 5 6 7 8 9 10 11 12	A request to remove an ink cartridge was made from this machine.	Take out the specified ink cartridge.
SET SOL CL-LIQUID 1 2 3 4 5 6 7 8 9 10 11 12	A request to insert a cleaning cartridge was made from this machine.	Insert the specified cleaning cartridge.
REMOVE SOL CL 1 2 3 4 5 6 7 8 9 10 11 12	A request to remove a cleaning cartridge was made from this machine.	Take out the specified cleaning cartridge.
SHEET SET ERROR SET AGAIN	• The [SETUP] key was pressed even though no media is loaded. Setup was performed with no media at the correct location. • An attempt was made to load media that is too small. • [EDGE SENSE] is set to [ENABLE], but transparent media was loaded.	• Load media at the correct location and press the [SETUP] key again (see "2-3 Loading Media"). Replace with media of loadable size. Wipe off the grime on the reflective tape, then perform setup again. • Replace with media of loadable size. • When using transparent media, set [EDGE SENSE] to [DISABLE] (see "6-2 Description of Menus").
SHEET NOT LOADED PRESS SETUP KEY	Printing test was attempted with no media loaded.	Load the media and try again. Press the [ENTER] key to continue.
PINCHROLL ERROR LOWER PINCHROLL	The [SETUP] key was pressed with the pinch rollers up. The pinch rollers were raised during setup.	Move the loading lever all the way to "LOAD" to lower the pinch rollers, then press the [SETUP] key (see "2-3 Loading Media").
DATA ERROR CANCELING...	A problem was found in the data received.	Make sure the cable is attached securely.
SET HEAD HEIGHT TO ***	The head height and the loaded media do not match.	Change the head height to the specified height and press the [ENTER] key.

* [1 2 3 4 5 6 7 8 9 10 11 12] indicate the numbers of the ink-cartridge ports. The character indicating the number of the ink-cartridge port flashes when action is necessary.

[Example]

```
SET SOL CRT.
123456789101112
```

If "4,5,10,11" is flashing:
Install ink cartridges in ink-cartridge ports 4, 5, 10, and 11.

Messages	Meaning	Action
EMPTY DRAIN BOTTLE	Discard discharged ink. * This message appears before operations that will discharge large amounts of ink. There is a chance of discharged ink overflowing if operations are carried out while the drain bottle is full.	Remove the drain bottle from this machine, discard the collected ink, then reinstall the drain bottle. Press the [ENTER] key to continue.
INSTALL DRAIN BOTTLE	Check that the drain bottle is set in position.	Set the drain bottle in place. Press the [ENTER] key to continue.
DO NOT USE MEDIA CLAMPS	Do not use media clamps. *This message appears when position the print head at 1 (low).	Detach media clamps to the media. Press the [ENTER] key to continue.
SHEET TOO SMALL CONTINUE?	The size of the data is larger than the printing or cutting area of the loaded media.	To continue performing output without correcting this, press the [ENTER] key. At this time, the portion extending beyond the printing or cutting area is not output. To stop output, stop sending data from the computer, then press the [SETUP] key. Make the printing or cutting area wider such as by replacing the media with large media or changing the positions of the pinch rollers, then send the data again.
CAN'T PRINT CROP CONTINUE?	• The size of the data including the crop marks is larger than the printing or cutting area of the loaded media. • The size of the data being output is too small.	• To continue performing output without correcting this, press the [ENTER] key. At this time, the portion extending beyond the printing or cutting area and cropmarks are not output. To stop output, stop sending data from the computer, then press the [SETUP] key. Make the printing or cutting area wider such as by replacing the media with large media or changing the positions of the pinch rollers, then send the data again. • Make the size of the data at least 40 mm (scanning direction) by 15 mm (feed direction) (1-5/8 in. by 5/8 in.). To continue performing output without correcting this, press the [ENTER] key. At this time, the data output without printing the crop marks. To stop output, stop sending data from the computer, then press the [SETUP] key. Change the size of the data, then send the data again.
MOTOR ERROR TURN OFF POWER	A motor error occurred.	Recovery from this problem is impossible. Use the POWER key to switch the power off and back on again. After rectifying the cause of the error (a media jam or the like), switch on the power. Do not leave the unit with the print-head carriage not in standby position.
TEMPERATURE IS TOO LOW	The air temperature where installed is lower than the ambient temperature at which the unit can operate (approx. 5°C (41°F) or more lower).	Recovery from this problem is impossible. Use the [POWER] key to switch the power off. First raise the temperature of the area where installed, then switch on the power.

Messages	Meaning	Action
TEMPERATURE IS TOO HIGH	The air temperature where installed is higher than the ambient temperature at which the unit can operate (approx. 40°C (104°F) or more higher).	Recovery from this problem is impossible. Use the [POWER] key to switch the power off. First drop the temperature of the area where installed, then switch on the power.
CANCELED FOR PROTECTING MOTOR	Continuous operation caused the pump motor to become hot, so operation was paused to prevent damage to the motor.	Press any key to cancel the message. Allow the unit to stand for about 40 minutes, then resume operation.
SERVICE CALL No: * * * *	• A problem occurred that resulted in a error that cannot be canceled. • Correct operation became impossible because an error occurred. • The useful life has ended for a component that must be replaced by a service technician.	Check the number shown on the display, then press the [POWER] key to switch off the power. After you switch off the power, inform your authorized Roland DG Corp. dealer or service center of the number that appeared on the display.
CARRIAGES ARE DISCONNECTED	The cutting carriage or print-head carriage are disconnected during printing, and printing cannot continue.	Recovery from this problem is impossible. Use the [POWER] key to switch the power off.
CROPMARK ERROR NOT FOUND	Automatic detection of crop marks by the [AUTO ALIGN] key could not be accomplished.	Load the media at the correct position and perform detection of crop marks again. Depending on the media, it may not be possible to detect crop marks automatically. If repeating automatic crop-mark detection results in an error again, then perform manual crop-mark detection (see "2-7 Reloading the Media and Performing Cutting").
PINCHROLL ERROR INVALID LEFT POS. (or RIGHT)	The [SETUP] key was pressed while the left or right hand pinch roller was at a location where there is no grit roller.	Position the left or right hand pinch roller correctly (above a grit roller), then press the [SETUP] key.

Chapter 8: Specifications

8-1 Media Conditions

Usable Media

Use genuine media from Roland DG Corp.

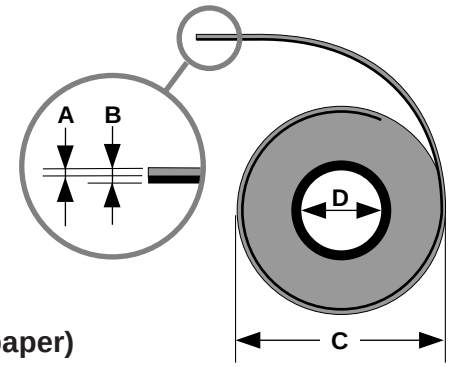

Media width
8-5/16 to 54 inches (210 to 1371 mm)

A) Cuttable media thickness
0.08 to 0.22 mm (3.2 to 8.6 mil)
(depending on media composition)

B) Maximum media thickness (including backing paper)
Printing only : 1.0 mm (39 mil)
When performing cutting : 0.4 mm (15 mil)

C) Maximum diameter for roll media
180 mm

D) Paper tube (core) inner diameter
50.8 mm or 73.2 mm (2 inches or 3 inches)

Maximum weight for roll media
20 kg (44 lb.)

Other conditions
Media such as the following cannot be used.
- Media having an inward curl (i.e., media whose print surface is on the inner side of the roll)
- Media whose end is attached to the paper pipe (core)
- Media which is severely warped or which has a strong tendency to reroll
- Media that cannot withstand the heat of the print heater
- Media whose paper pipe (core) is bent or crushed

Acceptable Media Width

210 to 1371 mm (8-5/16 to 54 in.)

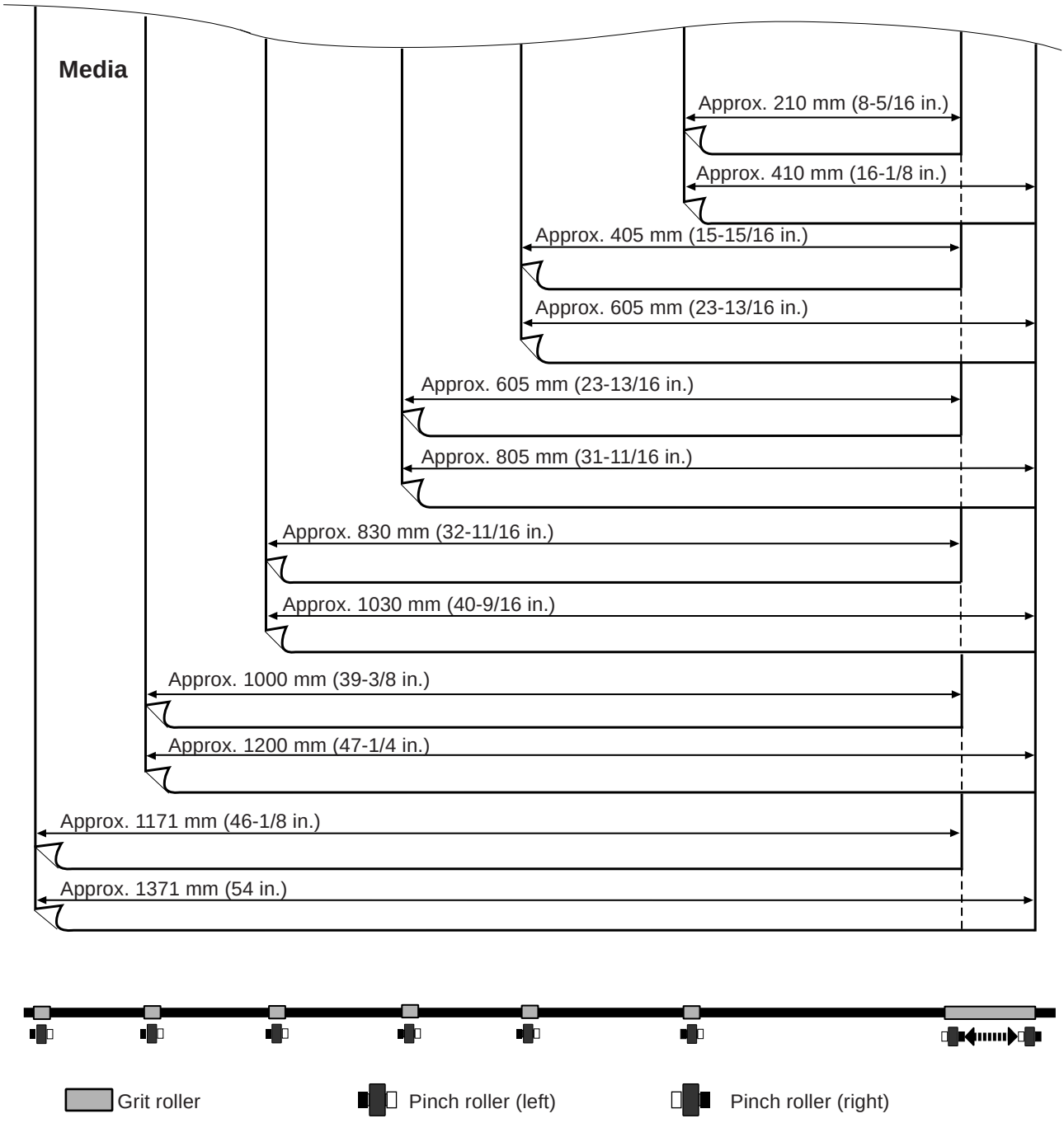

Point

Make sure the left and right pinch rollers are positioned above the grit rollers.

Use the middle pinch roller as required. Position one (or both) middle pinch rollers so as to form equally spaced intervals along the width of the media.

8-2 About the Printing or Cutting Area

The printing or cutting area along the horizontal plane (the direction in which the carriage moves) is determined by the position of the pinch rollers. The workable area spans the length between the two rollers, minus a margin of about 1.5 mm (about 0.06 in.) on both sides.
If "PIECE" has been selected and media length (the distance in the X direction as shown in the figure) is 2,000 mm (78-3/4 in.), the area is the same as when "EDGE" has been chosen.

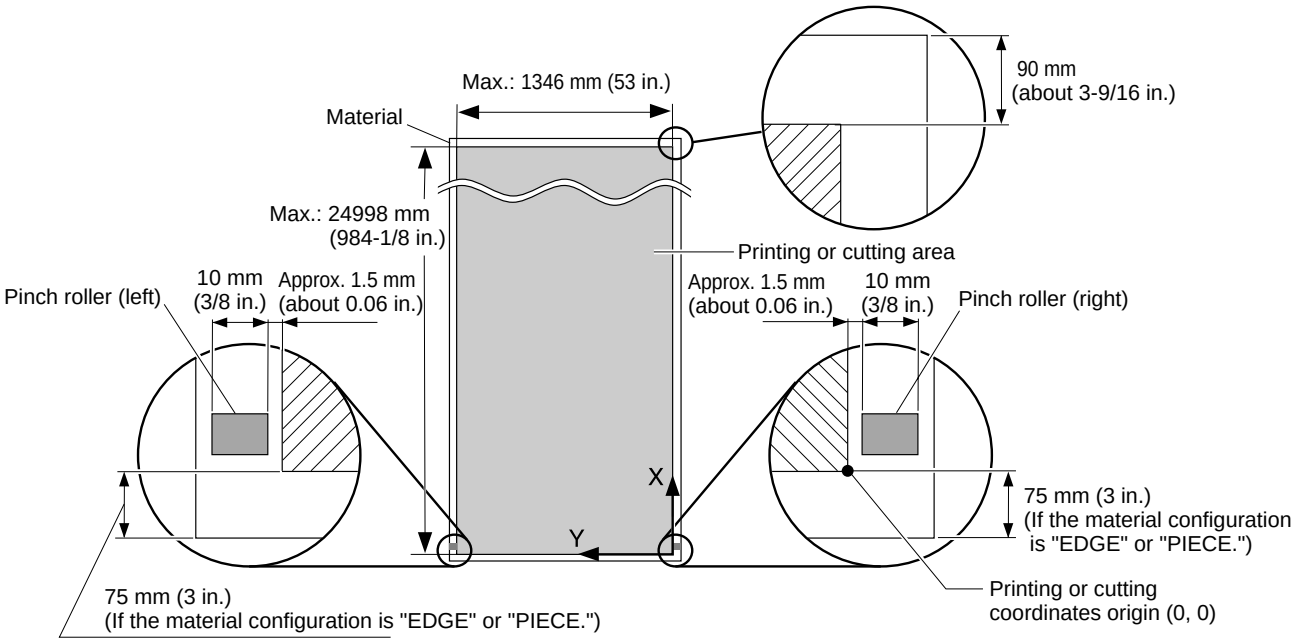

* The arrows in the figure indicating the X and Y directions indicate respectively the positive directions of the X axis and Y axis.

When crop marks are printed, the printing or cutting area in the area shown above is reduced by an amount equal to the size of the crop marks (12.5 mm (0.5 in.) + 12.5 mm (0.5 in.)).

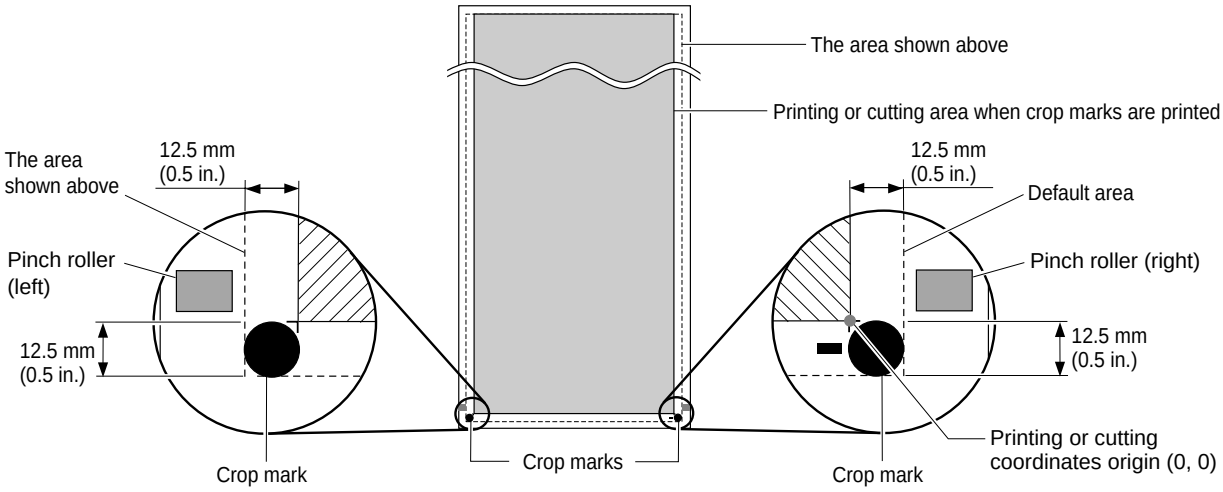

8-3 The Media-cutoff Location During Continuous Printing

The media-cutoff location that is used when a media-cutoff command is sent from the computer is determined as follows.

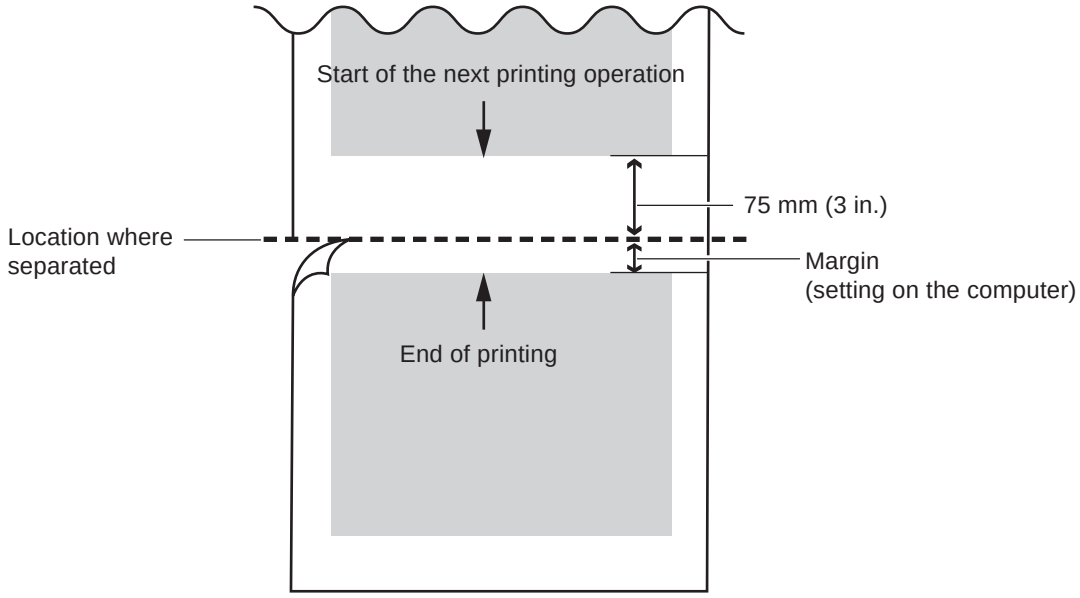

8-4 About Blade Life

Cutting conditions and blade life vary according to the hardness of the media and the usage environment. Making the settings for the conditions described below does not automatically guarantee attractive cutting results in all situations. Before performing actual cutting, be sure to carry out a cutting test and make any necessary adjustments. (refer to "2-5 Cutting" and see "Test Cutting")
If the media is not cut through completely even when the tool force is increased by 50 to 60 gf more than the tool force values shown below, it means that the useful life of the blade has ended. Replace with a new blade.

Blade	Media	Tool-force	Amount of cutter offset	Life of a blade (General guide)
ZEC-U1005	General Signage Vinyl	50 to 150 gf	0.25 mm (0.01 in.)	8000 m
ZEC-U5025	General Signage Vinyl	30 to 100 gf	0.25 mm (0.01 in.)	4000 m
	Fluorescent Vinyl	120 to 200 gf	0.25 mm (0.01 in.)	4000 m
	Reflective Vinyl	100 to 200 gf	0.25 mm (0.01 in.)	4000 m

* The values for lifespan are intended to serve as a general guide when cutting media of identical type.

8-5 Locations of the Power Rating and Serial Number Labels

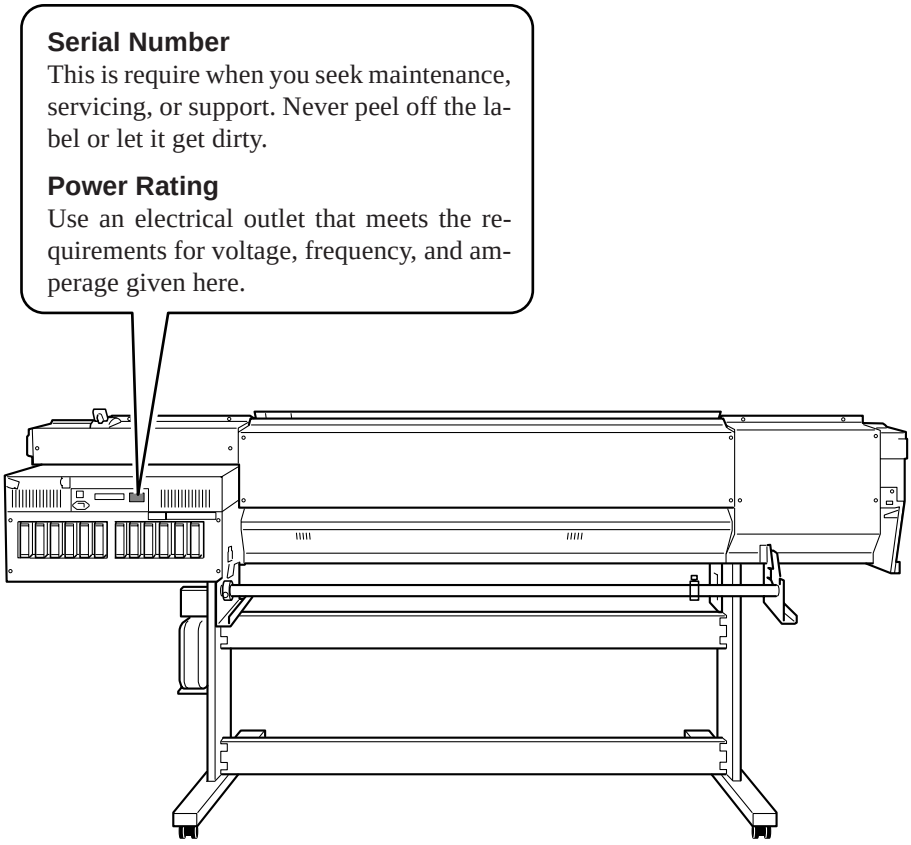

8-6 Specifications

		SC-545EX
Printing/Cutting method		Piezo ink-jet method/media-moving method
Acceptable media widths	While the print heater is running	500 to 1371 mm (19-11/16 to 54 in.)
	While the print heater is not running	210 to 1371 mm (8-5/16 to 54 in.)
Printing/Cutting width		Maximum 1346 mm (53 in.)
Ink cartridges	Type	Exclusive ECO-SOL INK cartridge
	Capacity	220 cc ±5 cc
	Color	Six colors (cyan, magenta, yellow, black, light cyan and light magenta)
Printing resolution (Printing dot resolution)		Maximum 1440 dpi
Acceptable tool		Special blade for CAMM-1 series
Cutting speed		10 to 600 mm/s (10 to 300 mm/s in the media-feed direction)
Blade force		30 to 300 gf
Blade offset compensation		0.000 to 1.500 mm (0 to 0.0591 in.)
Software resolution (When cutting)		0.025 mm/step (0.00984 in./step)
Distance accuracy	While the print heater is running (*1)	Error of less than ±0.3% of distance traveled, or ±0.3 mm, whichever is greater
	While the print heater is not running (*2)	Error of less than ±0.3% of distance traveled, or ±0.3 mm, whichever is greater
Distance accuracy (When cutting) (*3)		Error of less than ±0.4% of distance traveled, or ±0.3 mm, whichever is greater When distance correction has been performed (when the setting for [CALIBRATION] - [CUTTING ADJ.] has been made): Error of less than ±0.2% of distance traveled, or ±0.1 mm, whichever is greater
Repetition accuracy (When cutting) (*3)(*4)		±0.1 mm or less
Repetition between printing and cutting (*3)(*5)		±0.5 mm or less
Alignment accuracy for printing and cutting when reloading media (*3)(*6)		Error of less than ±0.5% of distance traveled, or ±3 mm, whichever is greater
Ink -fixing device (*7)		Print heater, Setting range for the preset temperature: 35 to 50˚C (96 to 122˚F)
Interface		Ethernet (10BASE-T/100BASE-TX, automatic switching)
Power-saving function		Automatic sleep feature
Power supply	Voltage and frequency	AC 117 V ±10%, 50/60 Hz or AC 220 to 240 V ±10%, 50/60 Hz
	Required power capacity	4.5 A (117 V) or 2.6 A (220 to 240 V)
Power consumption	During operation	Approx. 500 W (117 V) or 610 W (220 to 240 V)
	Sleep mode	Approx. 55 W
Acoustic noise level	During operation	65 dB (A) or less (according to ISO 7779)
	During standby	40 dB (A) or less (according to ISO 7779)
Dimensions (With stand)		2699 (W) x 742 (D) x 1300 (H) mm (106-5/16 (W) x 29-1/4 (D) x 51-3/16 (H) in.)
Weight (With stand)		153 kg (338 lb.)
Packed dimensions		2835 (W) x 850 (D) x 1005 (H) mm (111-5/8 (W) x 33-1/2 (D) x 39-5/8 (H) in.)
Packed weight		221 kg (487 lb.)
Environment	Power on (*8)	Temperature: 15 to 32˚C (59 to 89.6˚F) (20˚C (68˚F) or more recommended), humidity: 35 to 80% (no condensation)
	Power off	Temperature: 5 to 40˚C (41 to 104˚F), humidity: 20 to 80% (no condensation)
Included items		Power cord: 1, exclusive stand: 1, hexagonal wrench: 1, pipe: 1, media flanges: 2, stoppers: 2, blade: 1, blade holder: 1, pin: 1, transport bars: 2, drain bottle: 1, bottle stand: 1, Software RIP: 1, user's manual: 1, replacement blade for separating knife: 1, Roland-PrintServer CD-ROM: 1, Roland-PrintServer Network Settings Guide: 1, SOL INK Cleaning cartridges: 4, cleaning kit: 1 (cleaning sticks: 10, tweezers: 1, wipers: 2)

*1
- Media type: Roland SV-G-1270G, print travel: 1 m
- Preset temperature for the print heater: 40˚C
- Temperature: 20˚C, humidity: 50%

*2
- Media type: Roland PET-G-1050, print travel: 1 m

*3
Not assured when the print heater is used.

*4
The following conditions must be satisfied:
- Media type: 3M Scotchcal Mastercut Film
- Roll media must be loaded on the shaft
- The required length for cutting must be pulled out from the roll.
- Side margins: 25 mm or more for both the left and right margins
- Front margin: 35 mm or more
- Excluding stretching/contraction of the media

Range for assured repetition accuracy
- For media with a width exceeding 610 mm: Length 4,000 mm
- For media with a width of 610 mm or less: Length 8,000 mm

*5
- Provided that media length is under 3000 mm
- Temperature: 25˚C
- Excluding possible shift caused by expansion/contraction of the media and/or by reloading the media

*6
- Media type: Roland SV-G-1270G
- No lamination
- Data size: 3,000 mm in the media-feed direction, 1,000 mm in the carriage-movement direction
- When reloading the media, at the menu, select [BASE-ALIGN] to automatically detect crop marks.
- The required length for cutting must be pulled out from the roll.
- Temperature: 25˚C
- Excludes the effects of slanted movement and of expansion and contraction of the media

*7
The print heater temperature may not reach the preset temperature depending on ambient conditions or the width of the media.
Unevenness in temperature may be larger depending on ambient conditions or the width of the media.

*8
Operating environment

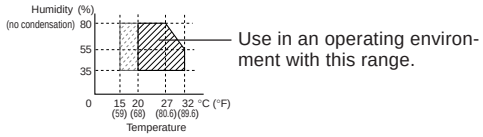

R2-041129