Introduction to T-Splines and Rhino® 4

Surface from control polygon

Designing a beer mug

Juan Santocono
T-Splines, Inc.

© Copyright 2008 T-Splines, Inc.

The **T-Splines** for Rhino plugin brings industrial designers new ways to easily create and modify organic designs. One T-Splines workflow is to create entire, editable surfaces from a line segment control polygon using the **tsControlPolygonToSrf** command. This tutorial will show how to use this workflow to create a beer mug.

In this tutorial, anything in Blue is a Rhino command, while anything in Red is a T-Splines command. Type these commands in the command line of Rhino, or click on their respective icons to run them.

The best way to read this tutorial is by referencing the 3D model at the same time. You can follow the model's progress by selecting the different layers in the file. The model can be downloaded at www.tsplines.com.

1 Creating input curves

Drawing lines

The first step is to draw the profile of the glass. Use the _Polyline command to create a group of profiles that will include the base, the tip and the main body. The profile you are creating will determine the thickness of the glass. The control points of the line segments will determinate where the surface control points will be, which you will use to edit the surface. Remember that you are drawing the control polygon here so you can make a surface that has the same control points and you will have a good idea of how the final surface profile is going to look (yellow).

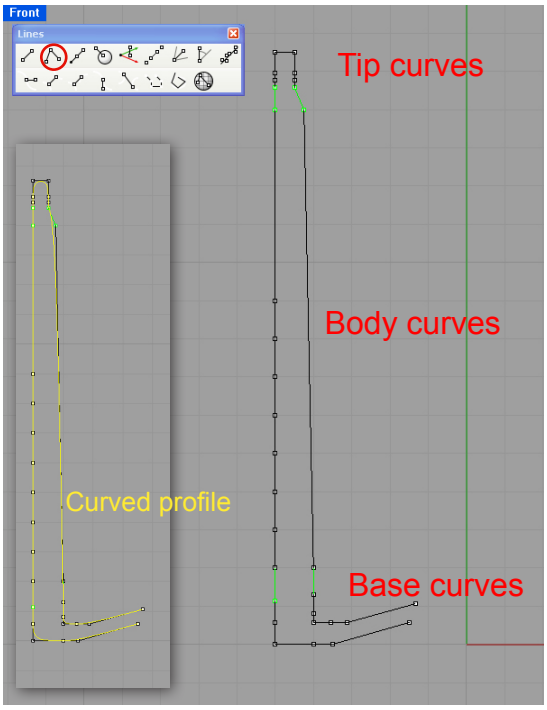

Now that you have one corner, just _Rotate with the Copy option to ge the three other corners, at 90º, 180º, and 270º.

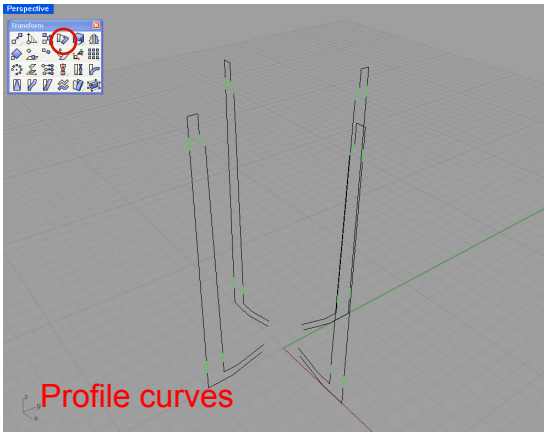

T•Splines

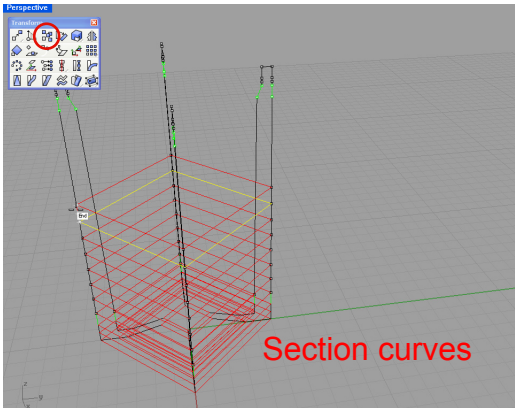

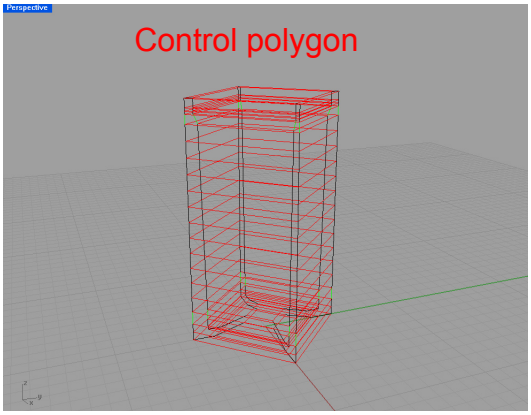

Next, connect all the points from the four profiles by using the _Polyline command with point snap on. This is creating cross sections, which will complete the control polygon. Notice that in this case there are a lot of sections that are the same dimensions; use _Copy with point snap on create the sections more quickly. This might seem intimidating, but by using you _Copy can get it all done quite quickly.

2 tsControlPolygonToSrf command

Editing the control polygon

Before you generate the surface, edit the control polygon by moving control points.
First, in right view, _Move the left highlighted control points in the -Z direction by 1 unit. Second, _Move the right highlighted points +Z by 1. While doing all this control point movement, make sure that you have the control points turned on for all of the line segments. Each time you move a point, make sure you marquee select it (by dragging a box around it) because each "point" actually contains three points, one from each of the surrounding line segments.

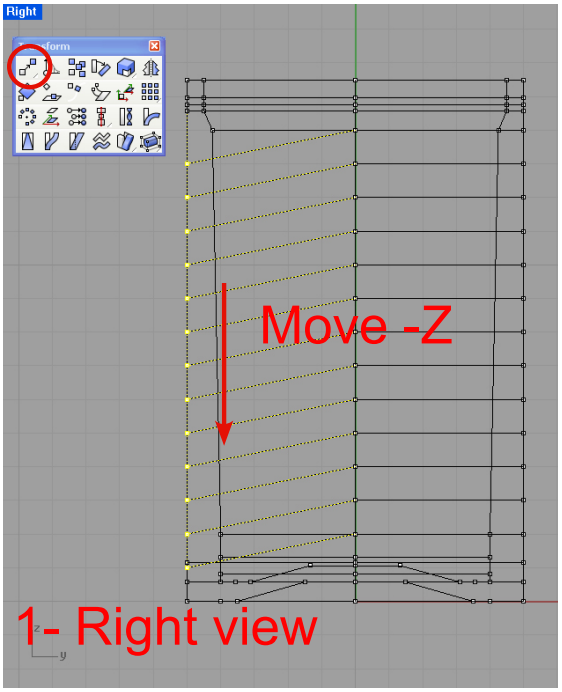

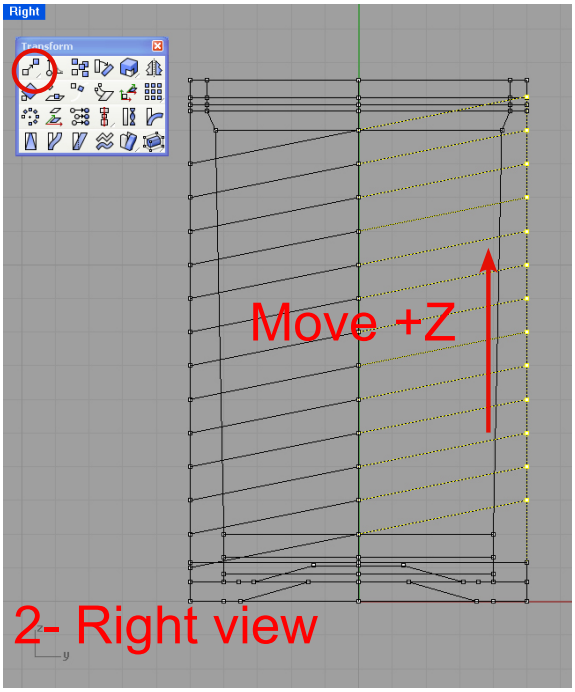

The idea of the design is to have an organic "spiral" form on the body of the glass. To generate the "spiral" shape, next select every fourth row of control points (the blue rows at left), starting at the bottom of the body curve, and _Move them +Y (just 0.5 units).

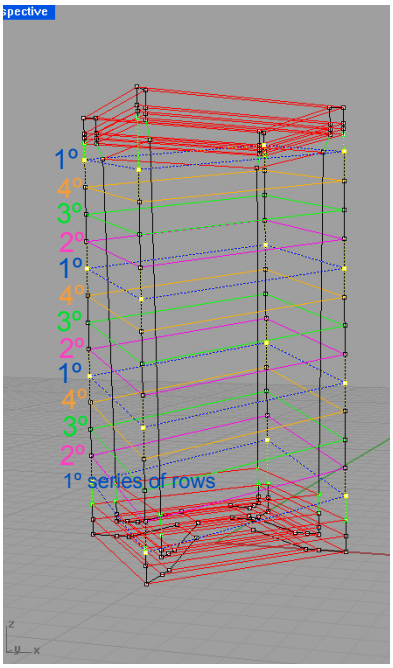

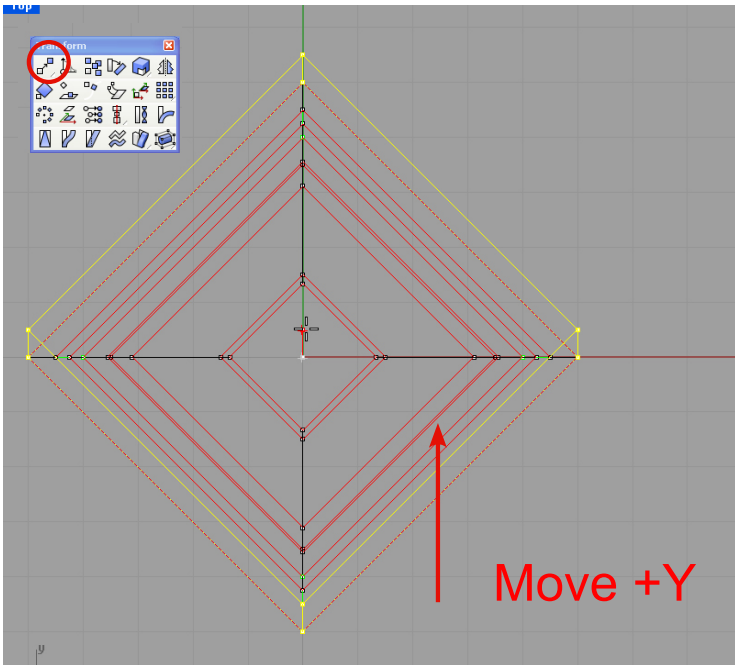

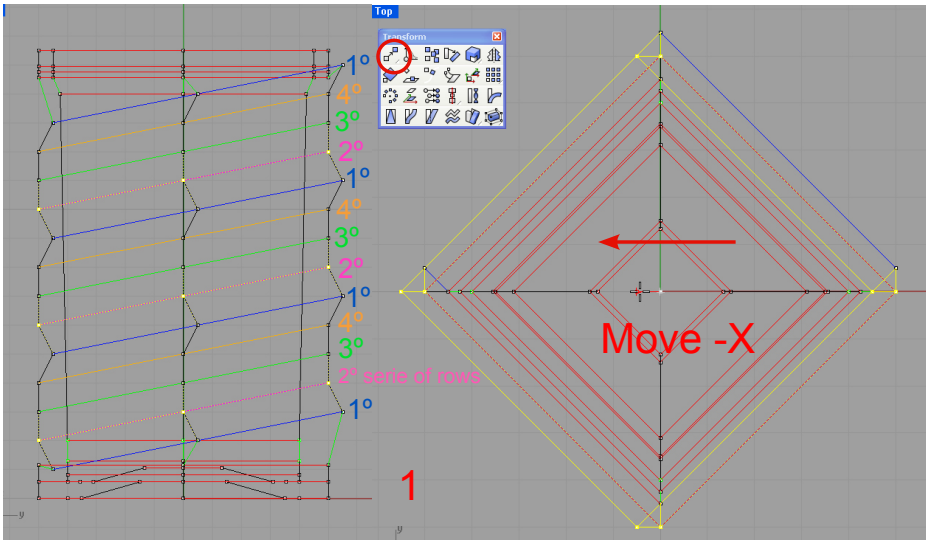

1-Now edit the next series of rows (3 pink rows shown) and _Move them 0.5 units in the -X direction.

T•Splines

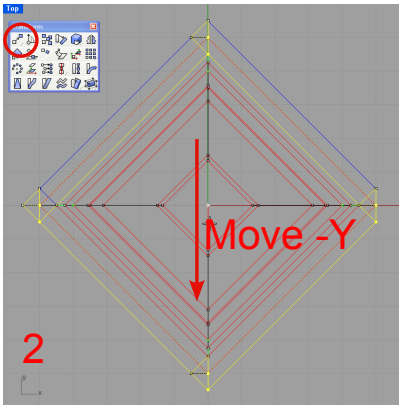

2- _Move the third (green) series of rows 0.5 units in the -Y direction.

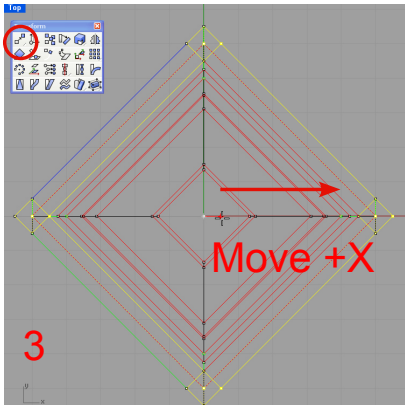

3- _Move the fourth (orange) series of rows 0.5 units in the +X direction.

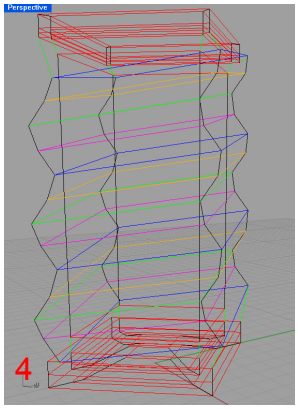

4-Now the main control polygon is completed.

Spliting the curves

In order to have valid input for the tsControlPolygonToSrf command, first you need to split the lines. Select all the lines and enter the _tsSplitCurves command. A dialog box will appear. Just check the display button to make sure all intersections for splitting the curves are correctly identified, and hit OK.

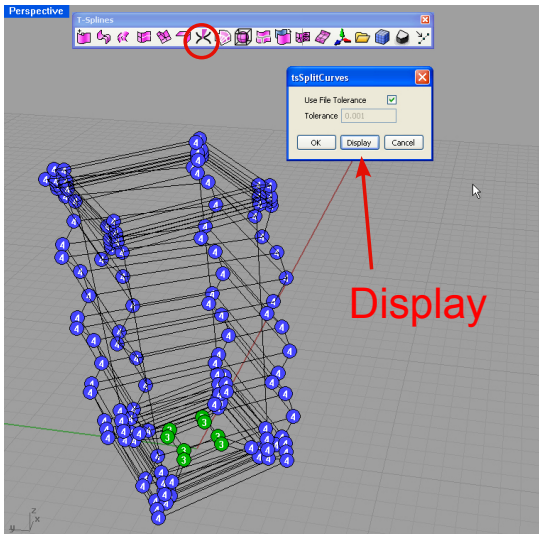

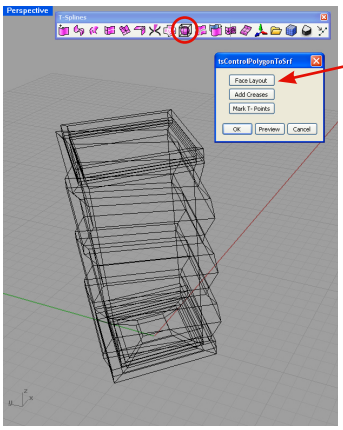

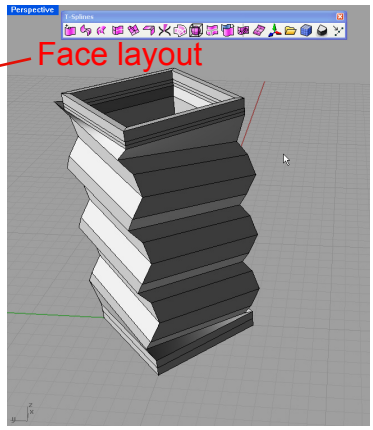

Generating the surface

Select all the input curves and run the _tsControlPolygonToSrf command.

Once inside the command, click the Face Layout button to see a rough preview of the surface. This option allows you to turn faces on and off in your final surface, and gives you the ability to create holes. Click on a face to turn it off and the command will

automatically reflow the geometry to make a better guess. To turn on a face, click on its edge, then select the desired face from the pop-up list. In this case, the rough preview is fine, so just hit Enter, then hit the OK button and the smooth T-Spline surface will be created.

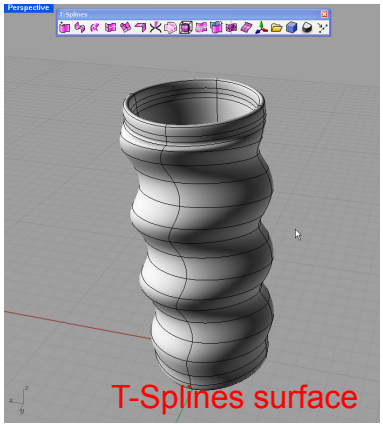

3 Generating the handle

Drawing the control polygons

Next, add a handle to the mug. Use the _Polyline command to draw the profile of the handle, then use _tsScriptExtrudeControlPolygon to extrude the 2D lines 2 units and make a 3D control polygon.

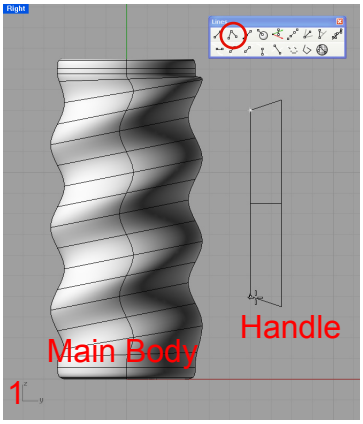

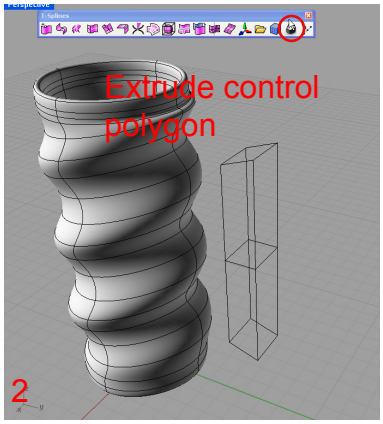

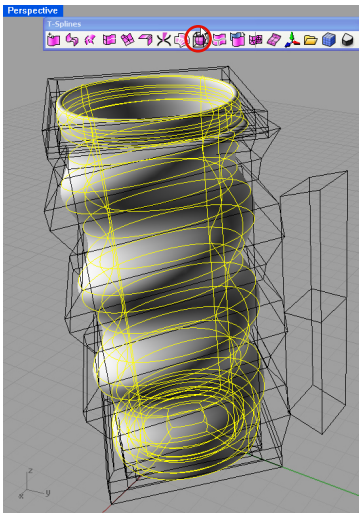

Now that you have the two parts it is time to bridge them together. The design idea is to have a handle that melts into the spiral shape. To bridge the mug and the handle together, first run _tsExtractControlPolygon on the T-Splines surface.

Next, draw some _Line (green) with osnap on, connecting the handle and the body edges (yellow).

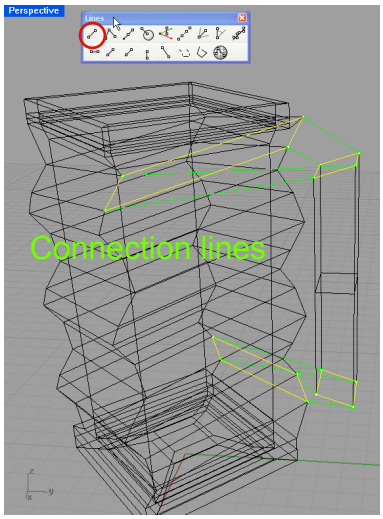

4

tsControlPolygonToSrf

Generating the beer mug

Now that you have a complete control polygon for both the mug and the handle, just select all the lines and run _tsControlPolygonToSurface. Use the Face Layout option to check the topology and see if the new bridging faces are right (they should be). Hit OK.

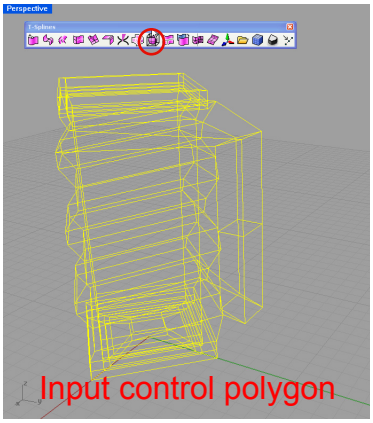

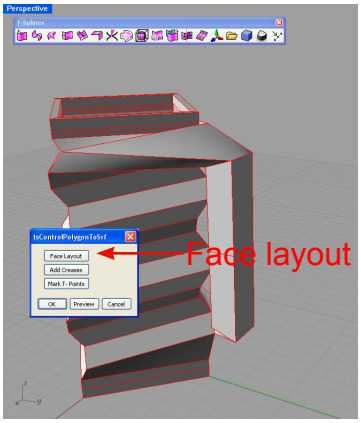

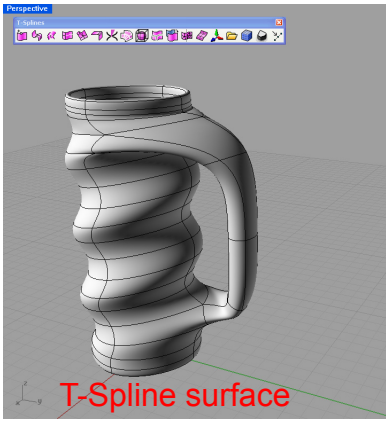

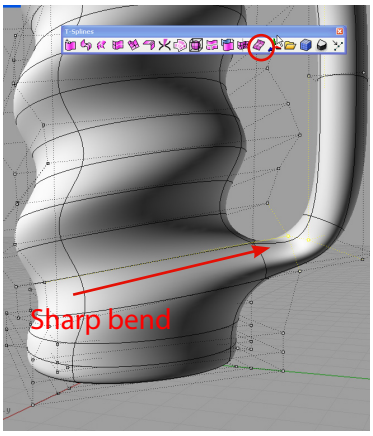

Some adjustments

At this point, the mug can be touched up to get just the right shape. Here is an unwanted sharp bend that can be smoothed by moving control points.

Select these four points and using the _tsManip, scale them -Z, just enough to get the right thickness in the handle.

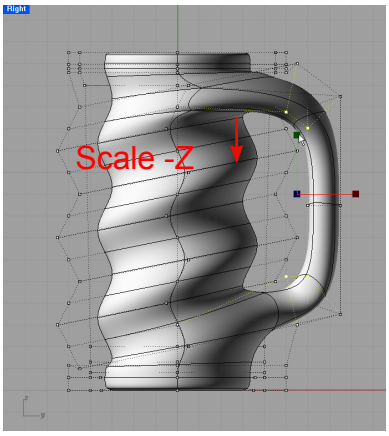

Some adjustments

In this model, where the handle meets the body, some tight star points are generating some creases. Run the _tsSetStarSmoothness command with the 5 smoothing steps option to smooth these creases.

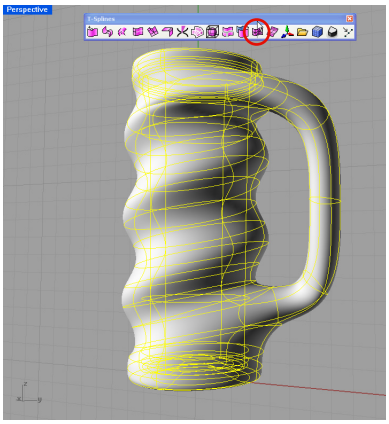

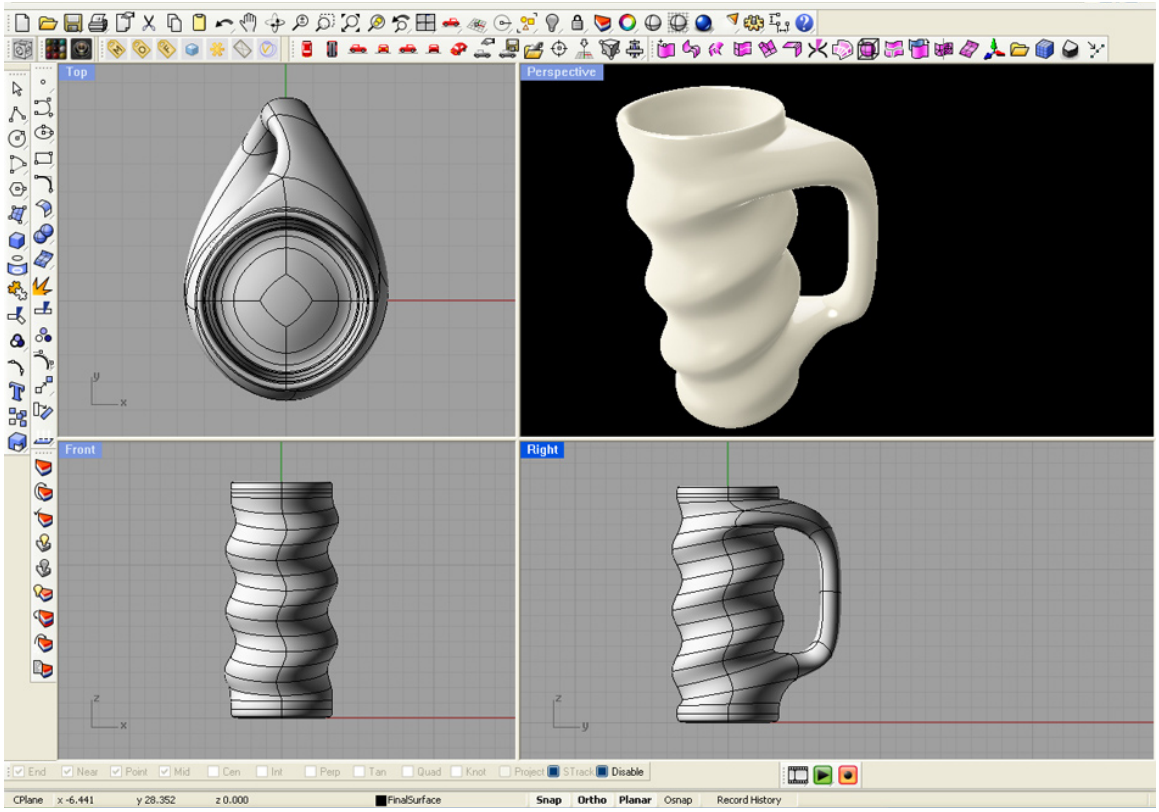

You have now modeled a perfectly smooth beer mug.

At this point, you can further edit the control points of the surface, or convert it to NURBS (_tsConvertToRhinoSurface) and use any of the native Rhino tools on it.

Good luck!

Juan Santocono
juan@tsplines.com

Download a free trial of T-Splines for Rhino at www.tsplines.com

T•Splines